TESY 30 YEARS OF PASSION INNOVATION TRUST



ELECTRIC WATER HEATERS

From one of the most modern water heater factories in Europe.

TESY

It’s impressive

... hot water solutions
offering you more.

TESY
It's impressive

CONTENT

page 16 **EWH**
page 18 **Flat models**
page 22 Bellislimo Dry Cloud
BelliSlimo Dry
page 24 BelliSlimo Cloud
BelliSlimo
page 26 BelliSlimo Lite Dry
page 28 BelliSlimo Lite

page 30 **Classic models**
page 32 ModEco-Cloud / Electronic / Ceramic / ModEco
page 44 Anticalc /Slim / Anticalc-Reversible
page 54 BiLight Smart / BiLight / BiLight Slim / BiLight Horizontal / BiLight Horizontal Floor
page 68 SimpatEco
page 72 Maxeau Ceramic / Maxeau

page 80 **EWH WITH HEAT EXCHANGERS**
page 84 **EWH with CLASSIC Heat Exchanger**
page 86 BiLight with classic heat exchanger

page 88 **EWH with Highly-efficient Heat Exchanger**
page 90 ModEco Ceramic with highly-efficient heat exchanger
page 92 ModEco with highly-efficient heat exchanger
page 94 BiLight with highly-efficient heat exchanger
page 96 BiLight slim with highly-efficient heat exchanger
page 98 BiLight horizontal with highly-efficient heat exchanger
page 100 MaxEau Ceramic with highly-efficient heat exchanger

EWH with A double-integrated Heat Exchanger
page 102 ModEco with a double-integrated heat exchanger
page 104 BiLight with a double-integrated heat exchanger

page 106 **Compact**
page 108 30l / 10l/15l / 7l / 5l

page 126 **IWH**
page 132 InstaLine Kitchen with a metal faucet,
page 134 InstaLine Kitchen with a ceramic faucet
page 136 InstaLine Bath with a shower head
page 138 InstaLine Multi

INNOVATIVE AND CONVENIENCE FEATURES



MYTESY APP


TOUCH CONTROL PANEL



LCD ELECTRONIC DISPLAY



BILIGHT FUNCTION


PUSH-PUSH ROTATING KNOB



ADJUSTABLE THERMOREGULATOR


EASY INSTALLATION


NEW PISTON EFFECT

ENERGY SAVING FEATURES



ECO SMART MODE


NO THERMAL BRIDGE



INSUTECH TECHNOLOGY

SECURITY AND LONG LIFE FEATURES



CERAMIC HEATING ELEMENT



DRY HEATING ELEMENT


CAPILLARY THERMOSTAT



CRYSTALTECH



ANODE PROTECTOR



STAINLESS STEEL PIPE



PLASMA WELDING


HYGIENIC CERTIFICATE


PRESSURE RELIEF VALVE


ANTI-FREEZE


SELF-DIAGNOSTICS SYSTEM

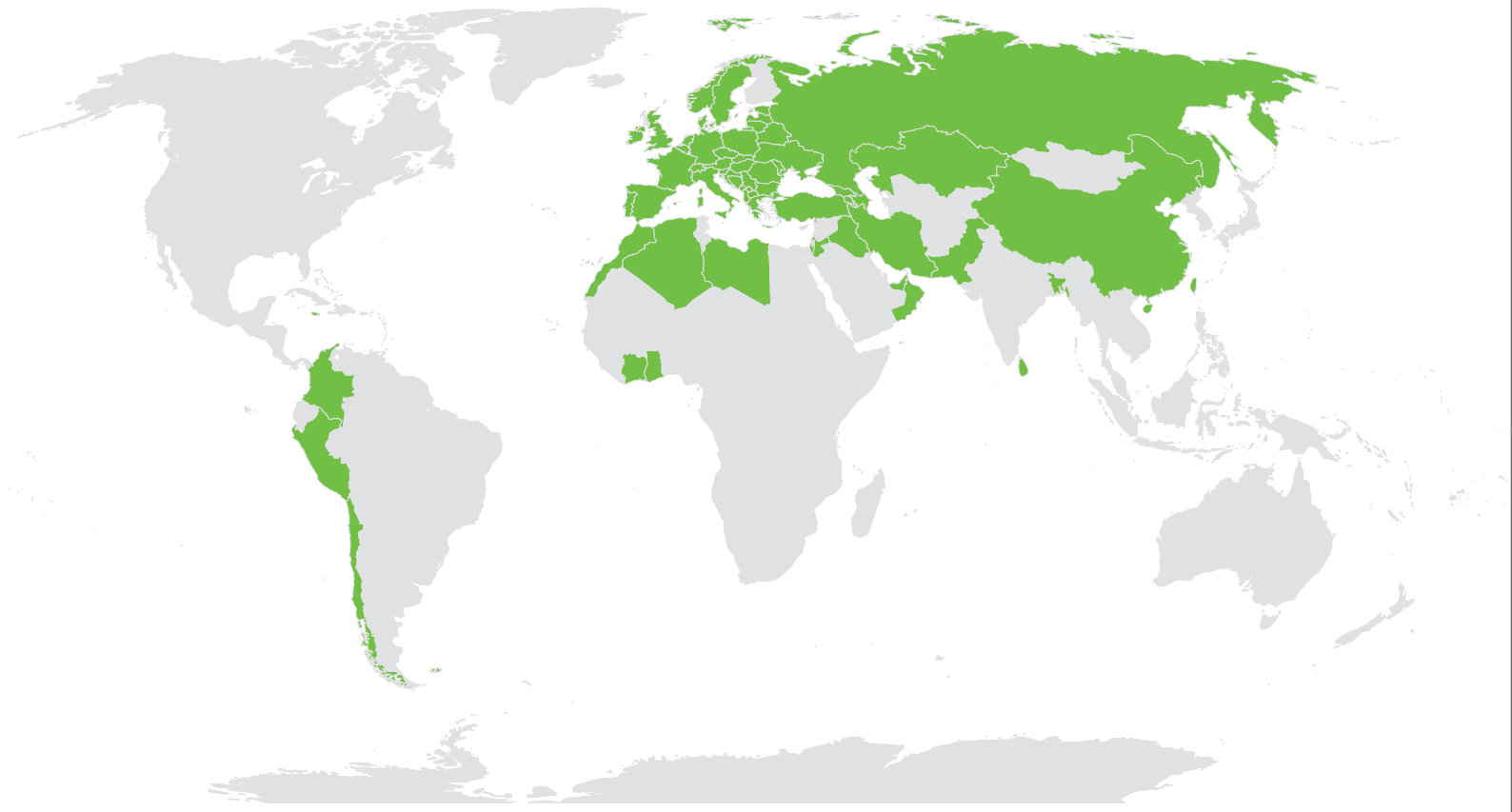

TESY
It's impressive

MORE THAN 55 COUNTRIES

4 CONTINENTS

MORE THAN 930 EMPLOYEES

4 FACTORIES

ABOUT TESY

TESY is one of the leading European producers of **electric storage water heaters, indirectly heated water tanks** and **heat pump water heaters.**

In the last decade TESY marked a rapid business growth driven by the launching of a wide range of products with modern design, as well as high energy efficiency and quality.

In line with the company's vision to raise the bar in the HVAC industry, TESY's products are already renowned among professionals and end users for their visual appeal, functionality, including Internet control on the premium appliances and number of patented solutions offering a high level of comfort.

Almost 30 years since its humble beginning, today TESY's products grace the homes of millions of happy users in over 55 countries on 4 continents.

MISSION

We set our hearts and minds on bringing warmth into your life.

VISION

Raising the bar in our industry, to be globally recognised as a leader of innovation and design in hot water and heating solutions. More comfort with a single touch.

VALUES

PASSION

We are a passionate team of enthusiastic professionals with ambitious goals. Leading by example, we create a culture that inspires people to go the extra mile.

We put our hearts and minds in everything we do to embrace dynamic change.

INNOVATION

TESY people are open-minded, eager to learn and inspired to create.

Challenging the status quo, we employ the latest technologies in supreme functionality and impressive design.

TRUST

The shared vision for openness and integrity is the core virtue of TESY's long-term partnerships.

Supportive, loyal and trustful, we offer reliable products and service quality with respect for the individual.







TESY is committed to integrate Corporate Social Responsibility into all business policies and practices and thus minimise the environmental impact during production.

We strive to constantly improve established processes and we are strictly following all regulations for environmental protection.

As our focus is on efficiency, our appliances can also use alternative sources of energy.



01 **96%** of **TESY's** waste is handed over for recycling and / or recovery.

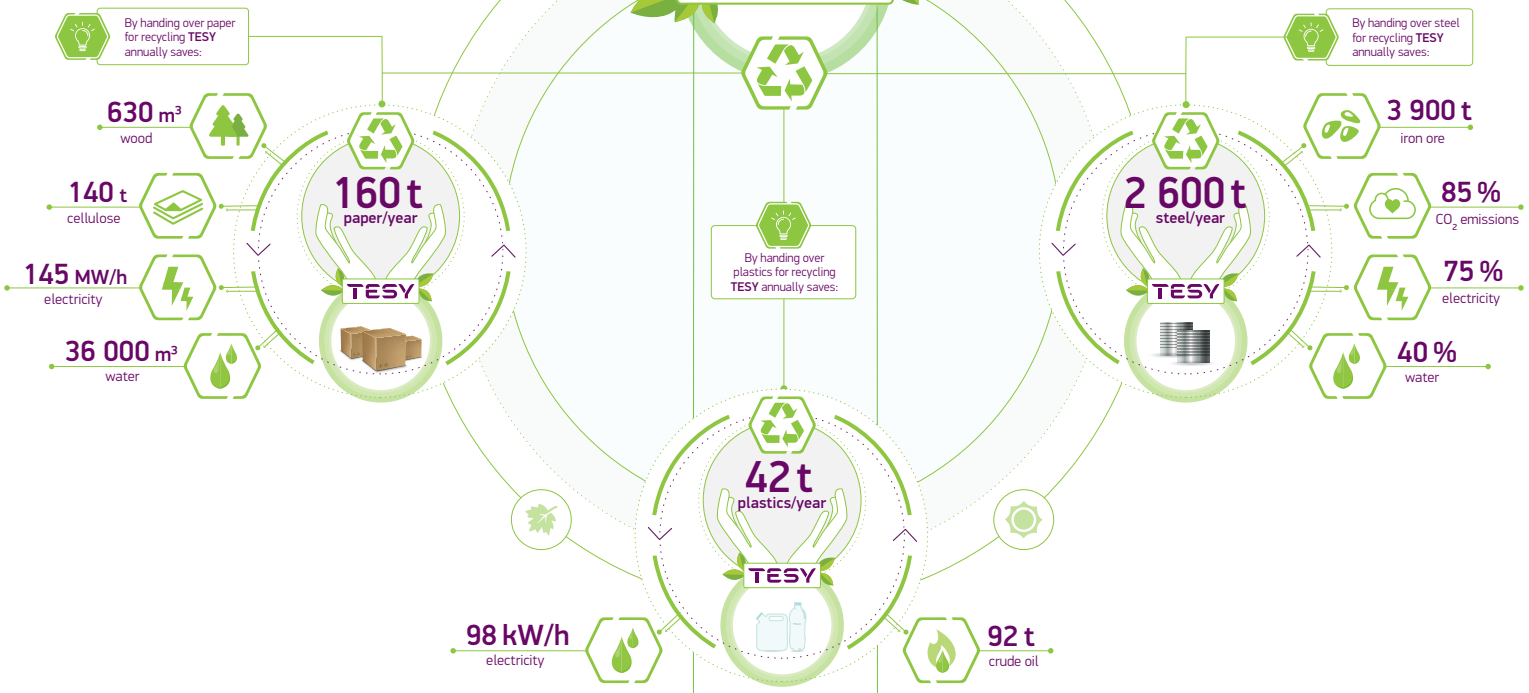

02 **90%** of the packages of the supplied chemical substances and solvents used in production are reusable packs.

03 **TESY** produces appliances that can be connected to alternative sources of energy.
TESY's product line also includes a heat pump water heater - an environmentally friendly appliance that can run on renewable energy sources and contributes to a clean environment by drastically minimising CO_2 emissions.

Data is for 2022



BECAUSE YOU GET SOLUTIONS THAT

- Are **SMART AND ELEGANT**, equipped with most innovative technologies
- Give you **MORE HOT WATER**
- Are **CONVENIENT** to install and use



WHY TO **CHOOSE TESY** WATER HEATERS?

- **SAVE ENERGY** and lower your electricity bills
- Are **SAFE** and secure to use
- Are reliable with **LIFE-LONG** excellent operation

ECO SMART MODE



ECO SMART MODE - intelligent and self-learning mode that ensures up to **18% ENERGY SAVINGS** on a weekly basis.

ECO SMART operating mode helps reduce the electricity costs without sacrificing the amount of hot water or the user's comfort. The software integrated into the electronic control, similarly to an artificial intelligence, independently tracks and memorises the habits of the user, thus creating a time schedule and managing the appliance's operation. This ensures hot water exactly when it is needed.

The ECO Smart mode also allows a one-off heating-up to the maximum temperature with no change to the established operating schedule (Boost).

INSUTECH

INSUTECH is a special technology that creates a highly efficient insulation for preserving the water hot until the time of usage. It allows elimination of the thermal bridge between the water tank and the mounting bracket which results in up to 16% lower thermal losses.

The precise parallel alignment of the water thank and the external jacket guarantees high density and uniform distribution of the insulation. The CFC and HCFC free PU formula makes the insulation safe and environmental-friendly.

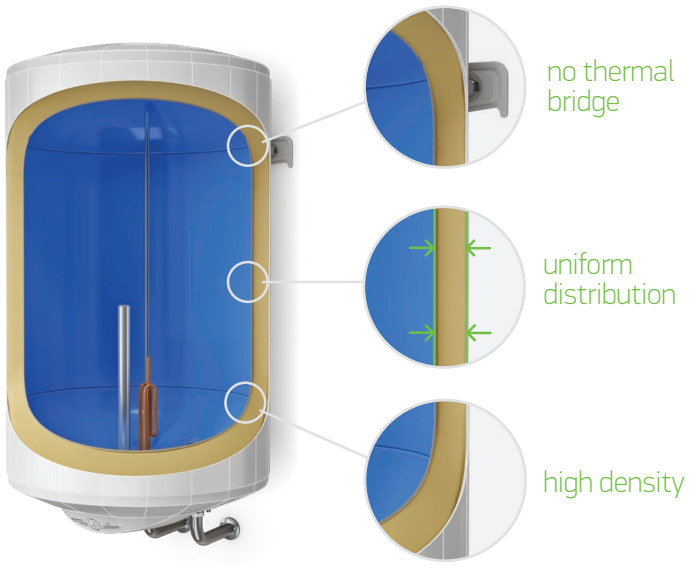

PLASMA WELDING

The **PLASMA WELDING** method ensures a high-quality and durable bond between the edges of the steel sheet forming the cylinder of the water tank by using a computerised and a low welding temperature. The absence of extra materials in the welding process grants a smoother surface, which ensures a high quality enamelling.



CRYSTALTECH

CRYSTALTECH is a new precise enamel coating of the water tank for protection against corrosion. The technologically higher level of precision of the enamelling process ensures an even distribution along the whole surface. Meanwhile the better adhesion to the metal enhances the durability of the water heater. The higher content of titanium in the enamel powder guarantees the additional strength and longer life of the water tank, regardless of the water quality.

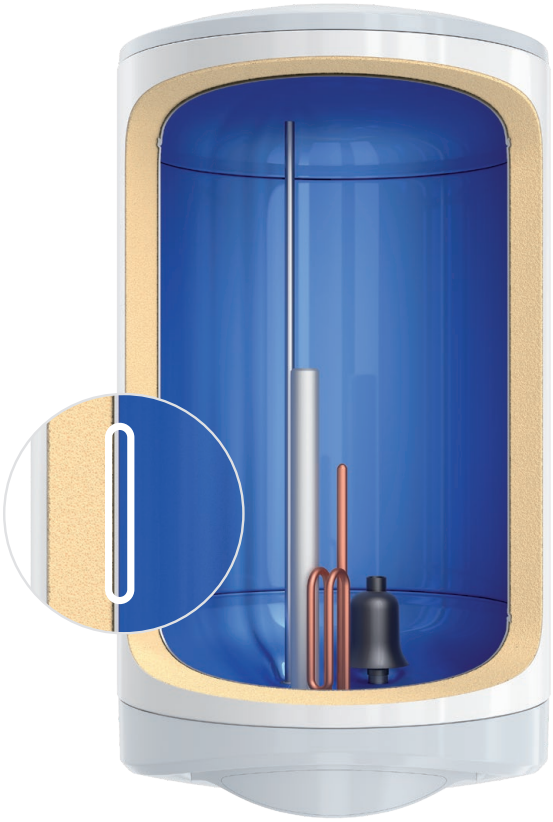

MyTESY App

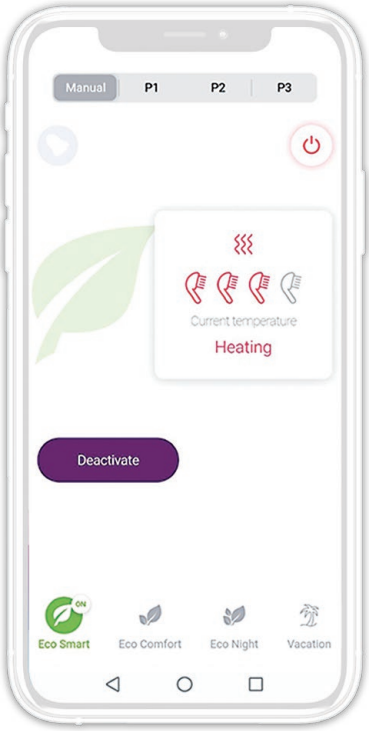

PROGRAM AND MONITOR YOUR APPLIANCE EFFICIENTLY VIA INTERNET CONTROL

MYTESY APP provides real-time monitoring, programing and control of the water heater via Internet at any time and anywhere. The installation and connection of the appliances is made easy and intuitive. Backup and recovery of the preferred operating modes are ensured in cases of loss of power or Internet connection failure. The connection between the water heater and the App is encrypted and highly secure, guaranteeing protection against any unwanted access. The option to link two or more electric water heaters enables fast and convenient control of the group. Using the precise programming and the remote control results in a reduction of the monthly electricity bills.

MyTESY App provides easy access to various functions:

- **WEEKLY PROGRAMMER** - used for setting the weekly operation of the electric water heater. A schedule can be set for each day of the week and each hour of the day, according to the customer's preferences.
- **VACATION MODE** - suitable for situations when the customer will not be at home for a period of time. By setting the duration of the absence, the expected return date and the desired temperature of the water, the electric water heater will know when the customer will be back and will deliver enough hot water. During the vacation period the appliance will operate in Anti-freeze mode.
- **ENERGY CALCULATOR** – allows easy monitoring of the consumed energy since the beginning of the electric water heater's operation or the last reset of the calculator.
- **BOOST FUNCTION** – one-time heating up to the maximum temperature.

Application for mobile devices with
Android, iOS or Harmony OS operating system

GET IT ON Google Play | Download on the App Store | EXPLORE IT ON AppGallery

TESY AR APP

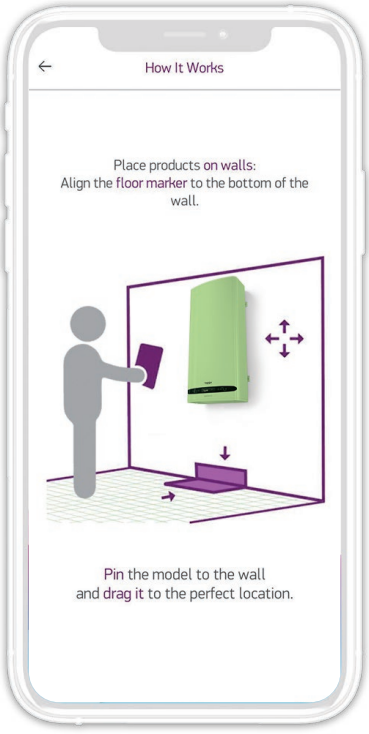

DISCOVER TESY ELECTRIC WATER HEATERS IN OUR AUGMENTED REALITY APPLICATION

Our latest application gives you the opportunity to visualise how any of our water heaters will fit in and will look like in the real environment of your home.

The selected water heater will appear in the scanned zone of your interior with its real dimensions and you will be able to select the desired position of the appliance on the wall or on the floor.

In case you are not sure which water heater is suitable for you needs, you can place multiple models and compare them, or turn to the built-in product advisor in the application to guide you to the appliance that best suits your needs and preferences.

TESY AR app is available for mobile devices with Android or iOS operating systems

Application for mobile devices with
Android or iOS operating system

GET IT ON Google Play | Download on the App Store

UNIVERSAL MOUNTING PLATE

The universal mounting plate is used for easy replacement of a water heater without additional drilling of the wall. You can easily replace another electric water heater with TESY thanks to this solution.

Easy installation in 2 steps:

Step 1: Mount the plate in the already existing openings on the wall
Step 2: Fix the water heater using its own mounting plate (without any additional fixing elements)

Safe and durable

Stylish design

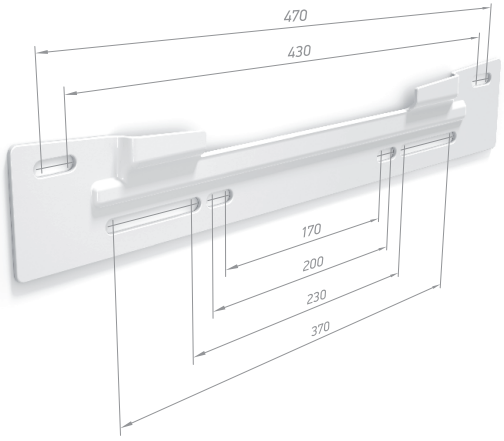



Step 1



Step 2

PISTON EFFECT

When heated, the hot water in the water heater flows to the top. When we take a shower, cold water from the pipeline network flows in at the bottom of the water heater. It mixes with the hot water and gradually cools it.

The inlet nozzle in the water heater is a device that controls the inflow of cold water and the speed at which it mixes with the hot one. Thanks to the NEW generation PISTON inlet nozzle, developed by TESY, the mixing process is significantly delayed.

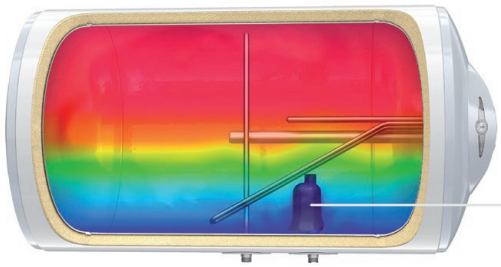

PISTON NOZZLE



HORIZONTAL WATER HEATER

VERTICAL WATER HEATER

WITH THE NEW PISTON NOZZLE A HORIZONTAL TESY WATER HEATER DELIVERS COMPARABLE QUANTITY OF HOT WATER AS A VERTICAL ONE.

This provides **UP TO 40%* MORE HOT WATER** for TESY BiLight horizontal models with the NEW PISTON inlet nozzle, compared to TESY BiLight horizontal models with the previous PISTON inlet nozzle.


TESY

TESY



FLAT
WATER HEATERS


TESY
BelliSlimo



BelliSlimo

INNOVATIVE AND ENERGY SAVING WITH ELEGANT FLAT SILHOUETTE

- BELLISLIMO DRY CLOUD
- BELLISLIMO DRY
- BELLISLIMO CLOUD
- BELLISLIMO
- BELLISLIMO LITE DRY
- BELLISLIMO LITE

TESY
It's impressive



BelliSlimo Dry Cloud



BelliSlimo Dry



BelliSlimo Cloud

Innovative and convenience features	Control via Internet	✓		✓
	Touch control panel	✓	✓	✓
	LCD electronic display	✓	✓	✓
	Vacation mode	✓	✓	✓
	Boost function	✓	✓	✓
	Weekly programming	✓	✓	✓
	Quick first shower	✓	✓	✓
	Reverse counter	✓	✓	✓
	Reversible mounting	✓	✓	✓
	Copper heating element			✓
Energy-saving features	Eco Smart mode	✓	✓	✓
	No thermal bridge	✓	✓	✓
	Insutech insulation	✓	✓	✓
Security and long-life features	Dry heating element	✓	✓	
	Capillary thermostat	✓	✓	✓
	Crystal Tech	✓	✓	✓
	Magnesium anode protector	✓	✓	✓
	Stainless steel hot water pipe	✓	✓	✓
	Plasma welding	✓	✓	✓
	Hygienic certificate	✓	✓	✓
	Pressure relief valve	✓	✓	✓
	Anti-freeze protection	✓	✓	✓

		 BelliSlimo	 BelliSlimo Lite	 BelliSlimo Lite Dry
Innovative and convenience features	Control via Internet			
	Touch control panel	✓	✓	✓
	LCD electronic display	✓		
	Vacation mode	✓		
	Boost function	✓		
	Weekly programming	✓		
	Quick first shower	✓		
	Reverse counter	✓		
	Reversible mounting	✓	✓	✓
	Copper heating element	✓	✓	✓
Energy-saving features	Eco Smart mode	✓	✓	✓
	No thermal bridge	✓	✓	✓
	Insutech insulation	✓	✓	✓
Security and long-life features	Dry heating element			✓
	Capillary thermostat	✓	✓	✓
	Crystal Tech	✓	✓	✓
	Magnesium anode protector	✓	✓	✓
	Stainless steel hot water pipe	✓	✓	✓
	Plasma welding	✓	✓	✓
	Hygienic certificate	✓	✓	✓
	Pressure relief valve	✓	✓	✓
	Anti-freeze protection	✓	✓	✓

BelliSlimo Dry Cloud*

BelliSlimo Dry

CONTROL VIA MyTESY App*, ULTRA THIN - 28 CM, FIRST SHOWER IN 40 MIN



INNOVATIVE AND CONVENIENCE FEATURES

CONTROL VIA INTERNET* (also available without internet - Bellislimo Dry range)

QUICK FIRST SHOWER: up to 40 min (for 80 l model)

BOOST FUNCTION: One-time heating up to the maximum temperature

VACATION MODE

PERSONALISED PROGRAMMING

EASY MAINTENANCE without preliminary draining of the water tank

BUILT FOR SPACE SAVING with an elegant and flat silhouette

REVERSIBLE: can be installed vertically or horizontally

ENERGY SAVING FEATURES

Delivering the **HIGHEST ENERGY CLASS** in its category

UP TO 18% ELECTRICITY SAVINGS on a weekly basis by ECO SMART self-learning regime

SECURITY AND LONG PRODUCT LIFE FEATURES

LIMESCALE PROTECTION AND QUIET OPERATION ensured by 2 dual dry heating elements

HIGH RELIABILITY AND SAFETY of the heating process by precise **CAPILLARY TERMOSTAT**

RELIABLE ANTICORROSION PROTECTION due to **CRYSTALTECH** enamel coating of the water tank

LONGER LIFE of the water tank ensured by a magnesium anode

HIGH TEMPERATURE AND PRESSURE RESISTANCE with a stainless steel hot water pipe

DURABLE BOND between the edges of the cylinder by PLASMA WELDING

HYGIENIC CERTIFICATE

PRESSURE RELIEF VALVE to prevent excess pressure build-up

ANTI-FREEZE protection

SELF-DIAGNOSTICS SYSTEM helps identify potential device issues

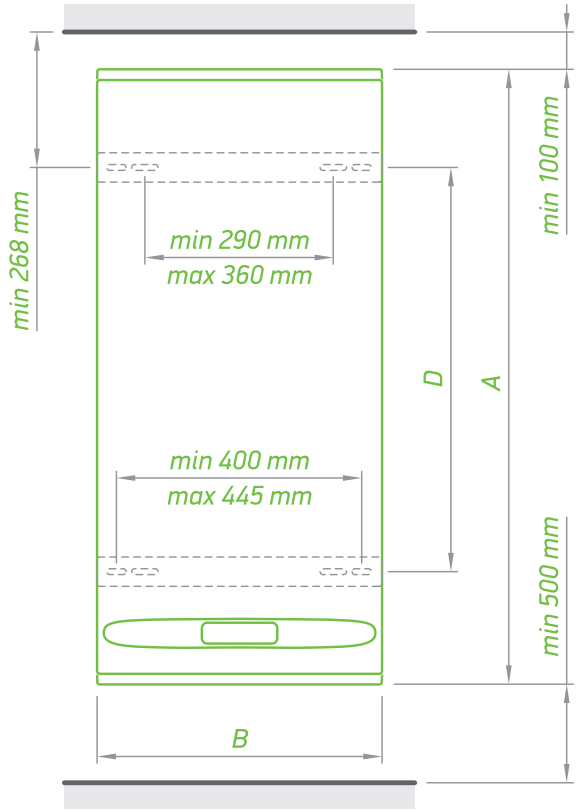

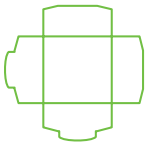

REVERSIBLE MODELS

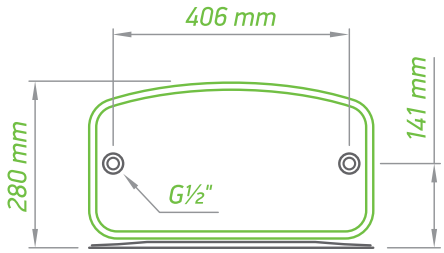

MODEL		BELLISLIMO DRY CLOUD 50		BELLISLIMO DRY CLOUD 80		BELLISLIMO DRY CLOUD 100		BELLISLIMO DRY 50		BELLISLIMO DRY 80		BELLISLIMO DRY 100	
CODE		GCR 502724D E31 ECW		GCR 802724D E31 ECW		GCR 1002724D E31 ECW		GCR 502724D E31 EC		GCR 802724D E31 EC		GCR 1002724D E31 EC	
Rated power	W	1200 / 2400		1200 / 2400		1200 / 2400		1200 / 2400		1200 / 2400		1200 / 2400	
Installation		V	H	V	H	V	H	V	H	V	H	V	H
Heating time – Δ t 45 K (15 - 60° C)		1 h 18 min		2 h 07 min		2 h 36 min		1 h 18 min		2 h 07 min		2 h 36 min	
Annual consumption of electricity AEC	kWh	1269	1269	1272	1272	1276	1276	1269	1269	1272	1272	1276	1276
Energy class		B	B	B	B	B	B	B	B	B	B	B	B
Load profile		M	M	M	M	M	M	M	M	M	M	M	M
*T out of box	°C	80	80	80	80	80	70	80	80	80	80	80	70
**V 40	L	83	68	140	105	154	105	83	68	140	105	154	105
***T max	°C	80	80	80	80	80	70	80	80	80	80	80	70
****Max 40	L	83	68	140	105	154	105	83	68	140	105	154	105
Real Volume	L	40		65		80		40		65		80	
PRODUCT DIMENSIONS													
height (A)	mm	704		1053		1279		704		1053		1279	
width (B)	mm	490		490		490		490		490		490	
depth (C)	mm	280		280		280		280		280		280	
(D)	mm	405		695		880		405		695		880	

*T out of box – the optimal working temperature for the specific electric water heater model, set by the producer
**V 40 – the quantity of hot water, which the electric water heater can produce, while working at T out of box
***T max – the maximal working temperature of the electric water heater
****Max 40 – the maximal quantity of hot water, which the electric water heater can produce, while working at maximum temperature

TESY
It's impressive

BelliSlimo Cloud*

BelliSlimo

CONTROL VIA MyTESY App*, SMART



INNOVATIVE AND CONVENIENCE FEATURES

CONTROL VIA INTERNET* (also available without internet - Bellislimo range)

QUICK FIRST SHOWER

BOOST FUNCTION: One-time heating up to the maximum temperature

VACATION MODE

PERSONALISED PROGRAMMING

BUILT FOR SPACE SAVING with an elegant and flat silhouette

REVERSIBLE: can be installed vertically or horizontally

ENERGY SAVING FEATURES

Delivering the **HIGHEST ENERGY CLASS** in its category

UP TO 18% ELECTRICITY SAVINGS on a weekly basis by ECO SMART self-learning regime

SECURITY AND LONG PRODUCT LIFE FEATURES

HIGH RELIABILITY AND SAFETY of the heating process by precise **CAPILLARY TERMOSTAT**

RELIABLE ANTICORROSION PROTECTION due to **CRYSTALTECH** enamel coating of the water tank

LONGER LIFE of the water tank ensured by a magnesium anode

HIGH TEMPERATURE AND PRESSURE RESISTANCE with a stainless steel hot water pipe

DURABLE BOND between the edges of the cylinder by PLASMA WELDING

HYGIENIC CERTIFICATE

PRESSURE RELIEF VALVE to prevent excess pressure build-up

ANTI-FREEZE protection

SELF-DIAGNOSTICS SYSTEM helps identify potential device issues

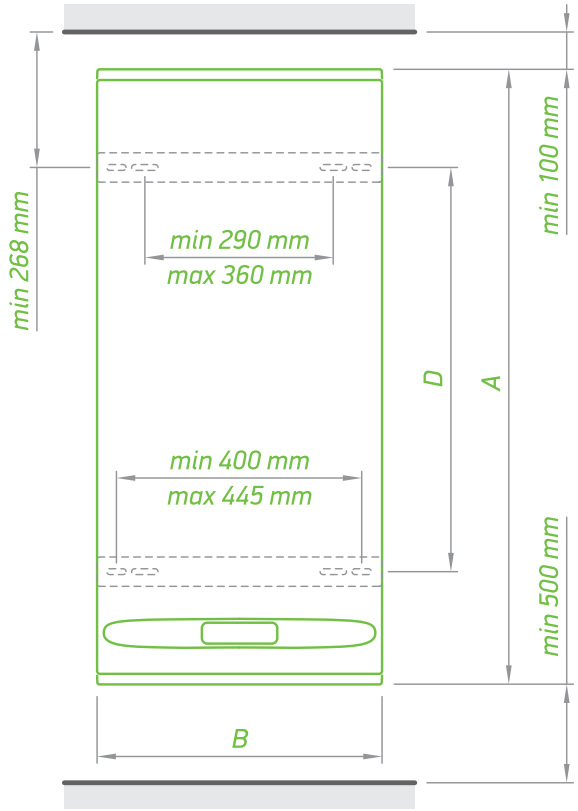

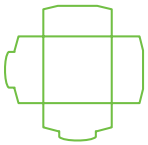

REVERSIBLE MODELS

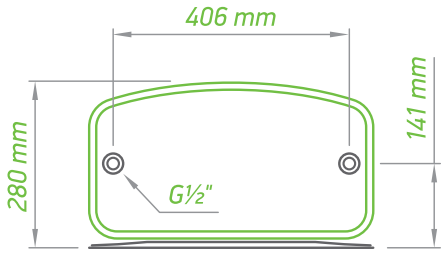

MODEL		BELLISLIMO CLOUD 30		BELLISLIMO CLOUD 50		BELLISLIMO CLOUD 80		BELLISLIMO CLOUD 100		BELLISLIMO 30		BELLISLIMO 50		BELLISLIMO 80		BELLISLIMO 100	
CODE		GCR 302712 E31 ECW		GCR 502722 E31 ECW		GCR 802722 E31 ECW		GCR 1002722 E31 ECW		GCR 302712 E31 EC		GCR 502722 E31 EC		GCR 802722 E31 EC		GCR 1002722 E31 EC	
Rated power	W	1200/1200		1200/2200		1200/2200		1200/2200		1200/1200		1200/2200		1200/2200		1200/2200	
Installation		V	H	V	H	V	H	V	H	V	H	V	H	V	H	V	H
Heating time – Δ t 45 K (15 - 60° C)		1 h 05 min		1 h 20 min		2 h 11 min		2 h 41 min		1 h 05 min		1 h 20 min		2 h 11 min		2 h 41 min	
Annual consumption of electricity AEC	kWh	482	493	1241	1241	1256	1256	1281	1281	482	493	1241	1241	1256	1256	1281	1281
Energy class		A	B	B	B	B	B	B	B	A	B	B	B	B	B	B	B
Load profile		S	S	M	M	M	M	M	M	S	S	M	M	M	M	M	M
*T out of box	°C	80	80	80	80	80	80	80	70	80	80	80	80	80	80	80	70
**V 40	L	47	45	80	70	140	109	171	103	47	45	80	70	140	109	171	103
***T max	°C	80	80	80	80	80	80	80	80	80	80	80	80	80	80	80	80
****Max 40	L	47	45	80	70	140	109	171	120	47	45	80	70	140	109	171	120
Real Volume	L	25		40		65		80		25		40		65		80	
PRODUCT DIMENSIONS																	
height (A)	mm	492		704		1053		1279		492		704		1053		1279	
width (B)	mm	490		490		490		490		490		490		490		490	
depth (C)	mm	280		280		280		280		280		280		280		280	
(D)	mm	165		405		695		880		165		405		695		880	

*T out of box – the optimal working temperature for the specific electric water heater model, set by the producer
**V 40 – the quantity of hot water, which the electric water heater can produce, while working at T out of box
***T max – the maximal working temperature of the electric water heater
****Max 40 – the maximal quantity of hot water, which the electric water heater can produce, while working at maximum temperature

BelliSlimo Lite Dry

ULTRA THIN - 28 CM, SMART, REVERSIBLE



INNOVATIVE AND CONVENIENCE FEATURES

EASY AND INTUITIVE touch control panel

BUILT FOR SPACE SAVING with an elegant and flat slim silhouette

REVERSIBLE: can be installed vertically or horizontally

ENERGY SAVING FEATURES

UP TO 18% ELECTRICITY SAVINGS on a weekly basis by ECO SMART self-learning regime

SECURITY AND LONG PRODUCT LIFE FEATURES

LIMESCALE PROTECTION AND QUIET OPERATION ensured by dual heating elements

HIGH RELIABILITY AND SAFETY of the heating process by precise **CAPILLARY TERMOSTAT**

RELIABLE ANTICORROSION PROTECTION due to **CRYSTALTECH** enamel coating of the water tank

LONGER LIFE of the water tank ensured by a magnesium anode

HIGH TEMPERATURE AND PRESSURE RESISTANCE with a stainless steel hot water pipe

DURABLE BOND between the edges of the cylinder by PLASMA WELDING

HYGIENIC CERTIFICATE

PRESSURE RELIEF VALVE to prevent excess pressure build-up

ANTI-FREEZE protection

SELF-DIAGNOSTICS SYSTEM helps identify potential device issues

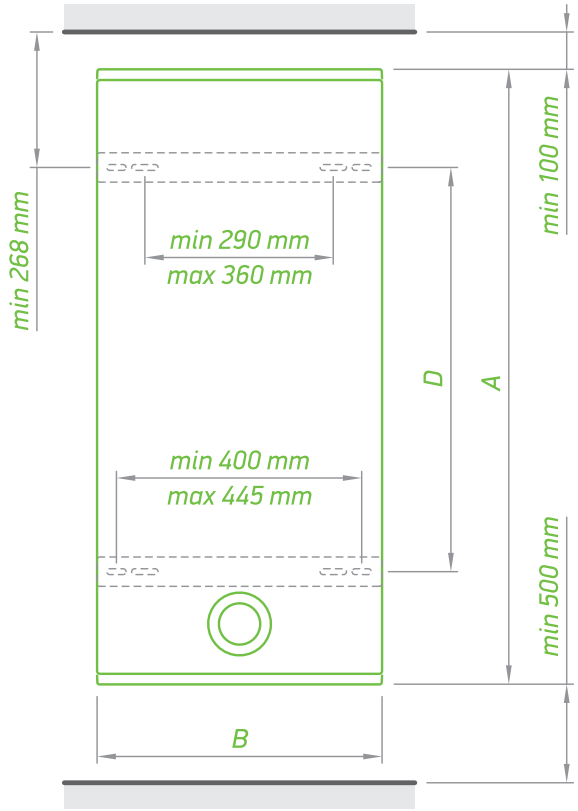

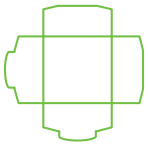

REVERSIBLE MODELS

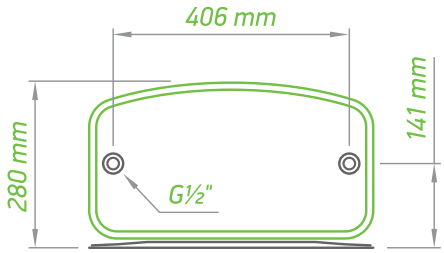

MODEL		BELLISLIMO LITE DRY 50		BELLISLIMO LITE DRY 80	
CODE		GCR 502712D E32 EC		GCR 802712D E32 EC	
Rated power	W	1200/1200		1200/1200	
Installation		V	H	V	H
Heating time – Δ t 45 K (15 - 60° C)		1 h 44 min		2 h 49 min	
Annual consumption of electricity AEC	kWh	1316	1316	1317	1317
Energy class		B	B	B	B
Load profile		M	M	M	M
*T out of box	°C	80	80	80	80
**V 40	L	83	66	140	107
***T max	°C	80	80	80	80
****Max 40	L	83	66	140	107
Real Volume	L	40		65	
PRODUCT DIMENSIONS					
height (A)	mm	704		1053	
width (B)	mm	490		490	
depth (C)	mm	280		280	
(D)	mm	405		695	

*T out of box – the optimal working temperature for the specific electric water heater model, set by the producer
**V 40 – the quantity of hot water, which the electric water heater can produce, while working at T out of box
***T max – the maximal working temperature of the electric water heater
****Max 40 – the maximal quantity of hot water, which the electric water heater can produce, while working at maximum temperature

BelliSlimo Lite

ULTRA THIN - 28 CM, SMART, REVERSIBLE



INNOVATIVE AND CONVENIENCE FEATURES

EASY AND INTUITIVE touch control panel

BUILT FOR SPACE SAVING with an elegant and flat silhouette

REVERSIBLE: can be installed vertically or horizontally

ENERGY SAVING FEATURES

UP TO 18% ELECTRICITY SAVINGS on a weekly basis by ECO SMART self-learning regime

SECURITY AND LONG PRODUCT LIFE FEATURES

HIGH RELIABILITY AND SAFETY of the heating process by precise **CAPILLARY TERMOSTAT**

RELIABLE ANTICORROSION PROTECTION due to **CRYSTALTECH** enamel coating of the water tank

LONGER LIFE of the water tank ensured by a magnesium anode

HIGH TEMPERATURE AND PRESSURE RESISTANCE with a stainless steel hot water pipe

DURABLE BOND between the edges of the cylinder by PLASMA WELDING

HYGIENIC CERTIFICATE

PRESSURE RELIEF VALVE to prevent excess pressure build-up

ANTI-FREEZE protection

SELF-DIAGNOSTICS SYSTEM helps identify potential device issues

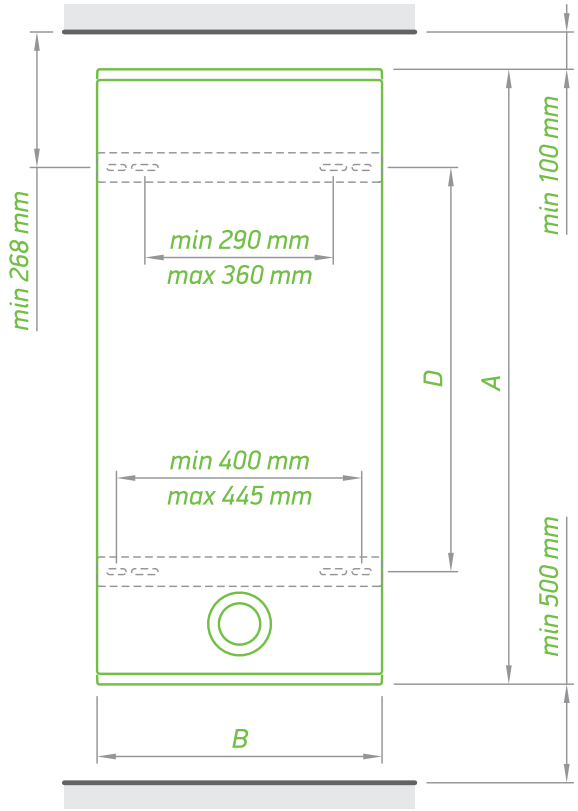

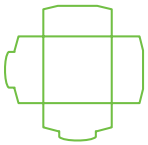

REVERSIBLE MODELS

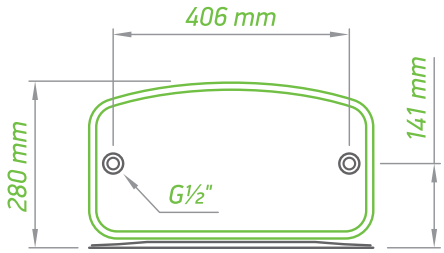

MODEL		BELLISLIMO LITE 50		BELLISLIMO LITE 80	
CODE		GCR 502712 E32 EC		GCR 802712 E32 EC	
Rated power	W	1200/1200		1200/1200	
Installation		V	H	V	H
Heating time – Δ t 45 K (15 - 60° C)		1 h 44 min		2 h 49 min	
Annual consumption of electricity AEC	kWh	1312	1279	1308	1289
Energy class		B	B	B	B
Load profile		M	M	M	M
*T out of box	°C	80	75	80	80
**V 40	L	80	65	139	109
***T max	°C	80	80	80	80
****Max 40	L	80	75	139	109
Real Volume	L	40		65	
PRODUCT DIMENSIONS					
height (A)	mm	704		1053	
width (B)	mm	490		490	
depth (C)	mm	280		280	
(D)	mm	405		695	

*T out of box – the optimal working temperature for the specific electric water heater model, set by the producer
**V 40 – the quantity of hot water, which the electric water heater can produce, while working at T out of box
***T max – the maximal working temperature of the electric water heater
****Max 40 – the maximal quantity of hot water, which the electric water heater can produce, while working at maximum temperature



TESY

CLASSIC
WATER HEATERS


TESY



ModEco

INNOVATIVE AND ENERGY SAVING

- MODECO CLOUD
- MODECO ELECTRONIC
- MODECO CERAMIC
- MODECO





		ModEco Cloud	ModEco Electronic
Innovative and convenience features	Control via Internet	✓	
	Touch control panel	✓	✓
	LCD electronic display	✓	✓
	Indoor connect	✓	
	Vacation mode	✓	✓
	Boost function	✓	✓
	Weekly programming	✓	✓
	Copper heating element		✓
Energy-saving features	Eco Smart mode	✓	
	No thermal bridge	✓	✓
	Insutech insulation	✓	✓
Security and long-life features	Ceramic heating element	✓	
	Capillary thermostat	✓	✓
	Crystal Tech	✓	✓
	Magnesium anode protector	✓	✓
	Stainless steel hot water pipe	✓	✓
	Plasma welding	✓	✓
	Hygienic certificate	✓	✓
	Pressure relief valve	✓	✓
	Anti-freeze protection	✓	✓
	Automatic Antilegionella Cycle	✓	
	Prevention from switching on without any water in the tank	✓	



ModEco Ceramic



ModEco

Innovative and convenience features	Control via Internet		
	Touch control panel		
	LCD electronic display		
	Indoor connect		
	Vacation mode		
	Boost function		
	Weekly programming		
	Copper heating element		✓
Energy-saving features	Eco Smart mode		
	No thermal bridge	✓	✓
	Insutech insulation	✓	✓
Security and long-life features	Ceramic heating element	✓	
	Capillary thermostat	✓	✓
	Crystal Tech	✓	✓
	Magnesium anode protector	✓	✓
	Stainless steel hot water pipe	✓	✓
	Plasma welding	✓	✓
	Hygienic certificate	✓	✓
	Pressure relief valve	✓	✓
	Anti-freeze protection	✓	✓
	Automatic Antilegionella Cycle		
	Prevention from switching on without any water in the tank		

ModEco Cloud

INTERNET, SMART, FOR HARD AND AGGRESSIVE WATER



INNOVATIVE AND CONVENIENCE FEATURES

CONTROL VIA INTERNET

CONTROL VIA LOCAL NETWORK by INDOOR CONNECT function without requirement for internet

FIRST SHOWER INDICATION

BOOST FUNCTION: One-time heating up to the maximum temperature

VACATION MODE

PERSONALISED PROGRAMMING

EASY AND INTUITIVE touch control panel with LCD display

EASY MAINTENANCE without preliminary draining of the water tank

MORE HOT WATER by NEW GENERATION PISTON inlet nozzle

ENERGY SAVING FEATURES

Delivering the **HIGHEST ENERGY CLASS** in its category

UP TO 18% ELECTRICITY SAVINGS on a weekly basis by ECO SMART self-learning regime

UP TO 16% LOWER THERMAL LOSSES due to NO THERMAL BRIDGE and INSUTECH technology for uniform distribution of a highly efficient insulation

SECURITY AND LONG PRODUCT LIFE FEATURES

LIMESCALE PROTECTION AND QUIET OPERATION ensured by the ceramic heating element

HIGH RELIABILITY AND SAFETY of the heating process by precise **CAPILLARY TERMOSTAT**

RELIABLE ANTICORROSION PROTECTION due to **CRYSTALTECH** enamel coating of the water tank

LONGER LIFE of the water tank ensured by a magnesium anode

HIGH TEMPERATURE AND PRESSURE RESISTANCE with a stainless steel hot water pipe

DURABLE BOND between the edges of the cylinder by PLASMA WELDING

HYGIENIC CERTIFICATE

PRESSURE RELIEF VALVE to prevent excess pressure build-up

ANTI-FREEZE protection

SELF-DIAGNOSTICS SYSTEM helps identify potential device issues

NEUTRALISES GERMS IN THE WATER TANK by Automatic Antilegionella setting

EMPTY TANK EXTRA PROTECTION by alert that activates if there is no water in the tank and switches off the appliance

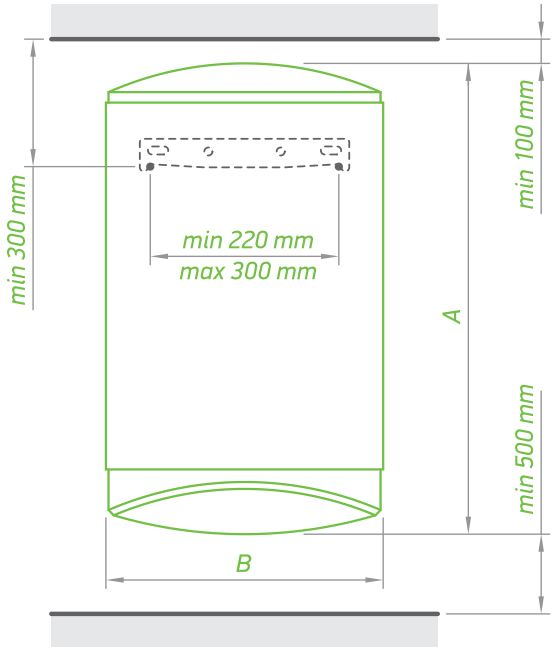

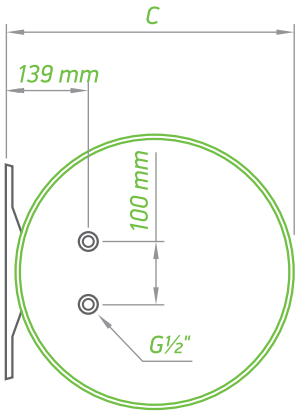

MODEL		MODECO CLOUD 50	MODECO CLOUD 80	MODECO CLOUD 100	MODECO CLOUD 120	MODECO CLOUD 150
CODE		GCV 504716D C22 ECW	GCV 804724D C22 ECW	GCV 1004724D C22 ECW	GCV 1204724D C22 ECW	GCV 1504724D C22 ECW
Real Volume	L	50	82	100	120	143
Diameter	mm	470	470	470	470	470
Rated power	W	1600	2400	2400	2400	2400
Heating time –Δ t 45 K (15 - 60° C)		1 h 37 min	1 h 47 min	2 h 10 min	2 h 36 min	3 h 05 min
Annual consumption of electricity AEC	kWh	1279	1181	1208	2561	2541
Energy class		B	B	B	C	C
Load profile		M	M	M	L	L
*T out of box	°C	70	70	70	70	70
**V 40	L	84	142	166	212	251
***T max	°C	75	75	75	75	75
****Max 40	L	94	154	192	236	279
Insulation	mm	32	32	32	32	32
PRODUCT DIMENSIONS						
height (A)	mm	595	845	985	1150	1315
width (B)	mm	470	470	470	470	470
depth (C)	mm	496	496	496	496	496

*T out of box – the optimal working temperature for the specific electric water heater model, set by the producer
**V 40 – the quantity of hot water, which the electric water heater can produce, while working at T out of box
***T max – the maximal working temperature of the electric water heater
****Max 40 – the maximal quantity of hot water, which the electric water heater can produce, while working at maximum temperature

ModEco Electronic

**SMART,
MORE HOT WATER**



INNOVATIVE AND CONVENIENCE FEATURES

FIRST SHOWER INDICATION to show when the water heater is ready for use

BOOST FUNCTION: One-time heating up to the maximum temperature

VACATION MODE: When you are back, the hot water is ready

PERSONALISED PROGRAMMING for every day and hour of the week

EASY AND INTUITIVE touch control panel with LCD display

MORE HOT WATER by NEW GENERATION PISTON inlet nozzle

ENERGY SAVING FEATURES

Delivering the **HIGHEST ENERGY CLASS** in its category

UP TO 18% ELECTRICITY SAVINGS on a weekly basis by ECO SMART self-learning regime

UP TO 16% LOWER THERMAL LOSSES due to NO THERMAL BRIDGE and INSUTECH technology for uniform distribution of a highly efficient insulation

SECURITY AND LONG PRODUCT LIFE FEATURES

HIGH RELIABILITY AND SAFETY of the heating process by precise **CAPILLARY TERMOSTAT**

RELIABLE ANTICORROSION PROTECTION due to **CRYSTALTECH** enamel coating of the water tank

LONGER LIFE of the water tank ensured by a magnesium anode

HIGH TEMPERATURE AND PRESSURE RESISTANCE with a stainless steel hot water pipe

DURABLE BOND between the edges of the cylinder by PLASMA WELDING

HYGIENIC CERTIFICATE

PRESSURE RELIEF VALVE to prevent excess pressure build-up

ANTI-FREEZE protection

SELF-DIAGNOSTICS SYSTEM helps identify potential device issues

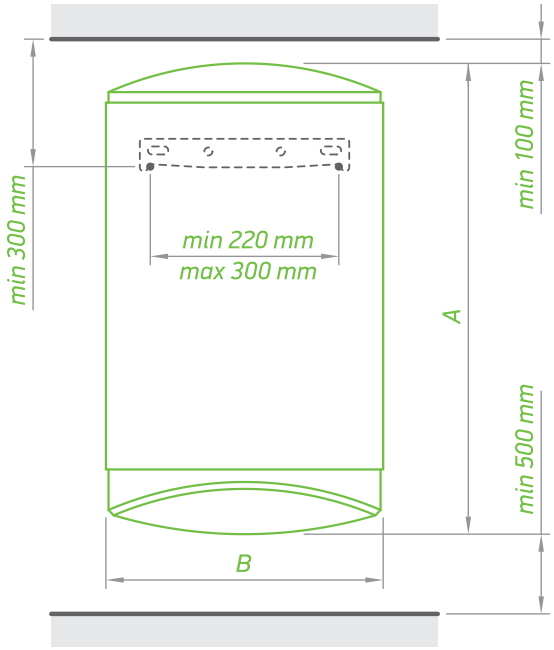

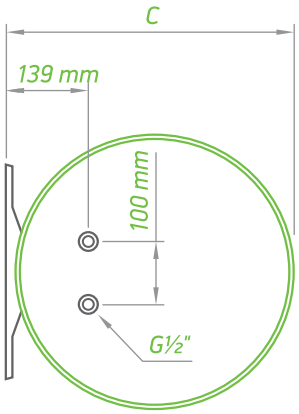

MODEL		MODECO ELECTRONIC 50	MODECO ELECTRONIC 80	MODECO ELECTRONIC 100
CODE		GCV 504720 C21 EC	GCV 804720 C21 EC	GCV 1004720 C21 EC
Real Volume	L	50	82	100
Diameter	mm	470	470	470
Rated power	W	2000	2000	2000
Heating time –Δ t 45 K (15 - 60° C)		1 h 18 min	2 h 08 min	2 h 36 min
Annual consumption of electricity AEC	kWh	1313	1312	1316
Energy class		B	B	B
Load profile		M	M	M
*T out of box	°C	70	70	70
**V 40	L	94	151	186
***T max	°C	75	75	75
****Max 40	L	101	168	209
Insulation	mm	32	32	32
PRODUCT DIMENSIONS				
height (A)	mm	595	845	985
width (B)	mm	470	470	470
depth (C)	mm	496	496	496

*T out of box – the optimal working temperature for the specific electric water heater model, set by the producer
**V 40 – the quantity of hot water, which the electric water heater can produce, while working at T out of box
***T max – the maximal working temperature of the electric water heater
****Max 40 – the maximal quantity of hot water, which the electric water heater can produce, while working at maximum temperature

TESY
It's impressive

ModEco Ceramic

FOR HARD AND AGGRESSIVE WATER



INNOVATIVE AND CONVENIENCE FEATURES

BILIGHT indication

- Red light: Heating
- Blue light: Ready to use

EASY MAINTENANCE without preliminary draining of the water tank

MORE HOT WATER by NEW GENERATION PISTON inlet nozzle

ENERGY SAVING FEATURES

Delivering the **HIGHEST ENERGY CLASS** in its category

UP TO 16% LOWER THERMAL LOSSES due to NO THERMAL BRIDGE and INSUTECH technology for uniform distribution of a highly efficient insulation

ECO setting of the thermoregulator for cost-efficient and long-lasting operation.

SECURITY AND LONG PRODUCT LIFE FEATURES

LIMESCALE PROTECTION AND QUIET OPERATION ensured by the ceramic heating element

HIGH RELIABILITY AND SAFETY of the heating process by precise **CAPILLARY TERMOSTAT**

RELIABLE ANTICORROSION PROTECTION due to **CRYSTALTECH** enamel coating of the water tank

LONGER LIFE of the water tank ensured by a magnesium anode

HIGH TEMPERATURE AND PRESSURE RESISTANCE with a stainless steel hot water pipe

DURABLE BOND between the edges of the cylinder by PLASMA WELDING

HYGIENIC CERTIFICATE

PRESSURE RELIEF VALVE to prevent excess pressure build-up

ANTI-FREEZE protection

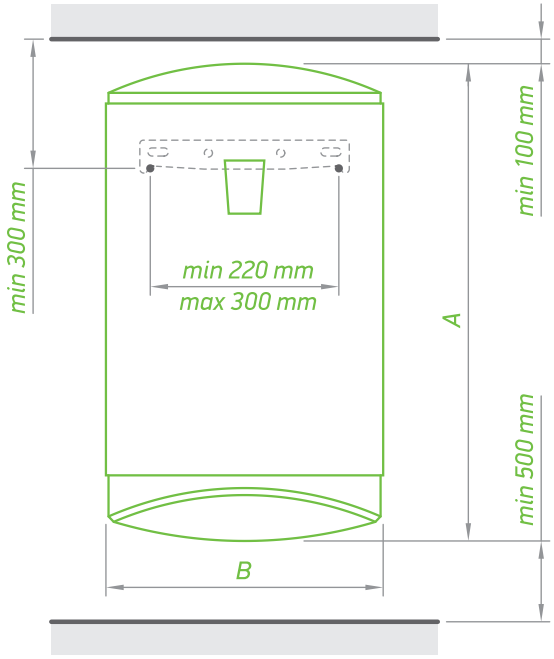

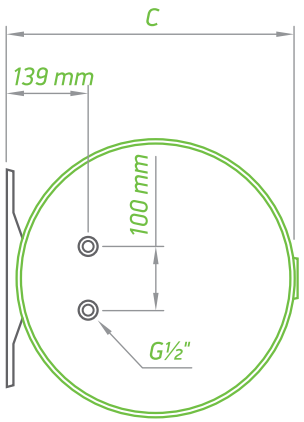

MODEL		MODECO CERAMIC 50	MODECO CERAMIC 80	MODECO CERAMIC 120	MODECO CERAMIC 120	MODECO CERAMIC 150
CODE		GCV 504716D C21 TS2R(C)	GCV 804724D C21 TS2R(C)	GCV 1004724D C21 TS2R(C)	GCV 1204724D C21 TS2R(C)	GCV 1504724D C21 TS2R(C)
Real Volume	L	50	82	100	120	142
Diameter	mm	470	470	470	470	470
Rated power	W	800 / 1600	1200 / 2400	1200 / 2400	1200 / 2400	1200 / 2400
Heating time –Δ t 45 K (15 - 60° C)		3 h 15 min 1 h 37 min	3 h 34 min 1 h 47 min	4 h 21 min 2 h 10 min	5 h 13 min 2 h 36 min	6 h 10 min 3 h 05 min
Annual consumption of electricity AEC	kWh	1360	1335	1314	2652	4303
Energy class		C	B	B	C	C
Load profile		M	M	M	L	XL
*T out of box	°C	60	70	60	60	70
**V 40	L	71	145	145	161	249
***T max	°C	70	70	70	70	70
****Max 40	L	86	145	171	175	249
Insulation	mm	32	32	32	32	32
PRODUCT DIMENSIONS						
height (A)	mm	595	845	985	1150	1315
width (B)	mm	470	470	470	470	470
depth (C)	mm	496	496	496	496	496

*T out of box – the optimal working temperature for the specific electric water heater model, set by the producer
**V 40 – the quantity of hot water, which the electric water heater can produce, while working at T out of box
***T max – the maximal working temperature of the electric water heater
****Max 40 – the maximal quantity of hot water, which the electric water heater can produce, while working at maximum temperature

ModEco

LONG LIFE, MORE HOT WATER



INNOVATIVE AND CONVENIENCE FEATURES

BILIGHT indication

- Red light: Heating
- Blue light: Ready to use

MORE HOT WATER by NEW GENERATION PISTON inlet nozzle

ENERGY SAVING FEATURES

UP TO 16% LOWER THERMAL LOSSES due to NO THERMAL BRIDGE and INSUTECH technology for uniform distribution of a highly efficient insulation

ECO setting of the thermoregulator for cost-efficient and long-lasting operation.

SECURITY AND LONG PRODUCT LIFE FEATURES

HIGH RELIABILITY AND SAFETY of the heating process by precise **CAPILLARY TERMOSTAT**

RELIABLE ANTICORROSION PROTECTION due to **CRYSTALTECH** enamel coating of the water tank

LONGER LIFE of the water tank ensured by a magnesium anode

HIGH TEMPERATURE AND PRESSURE RESISTANCE with a stainless steel hot water pipe

DURABLE BOND between the edges of the cylinder by PLASMA WELDING

HYGIENIC CERTIFICATE

PRESSURE RELIEF VALVE to prevent excess pressure build-up

ANTI-FREEZE protection

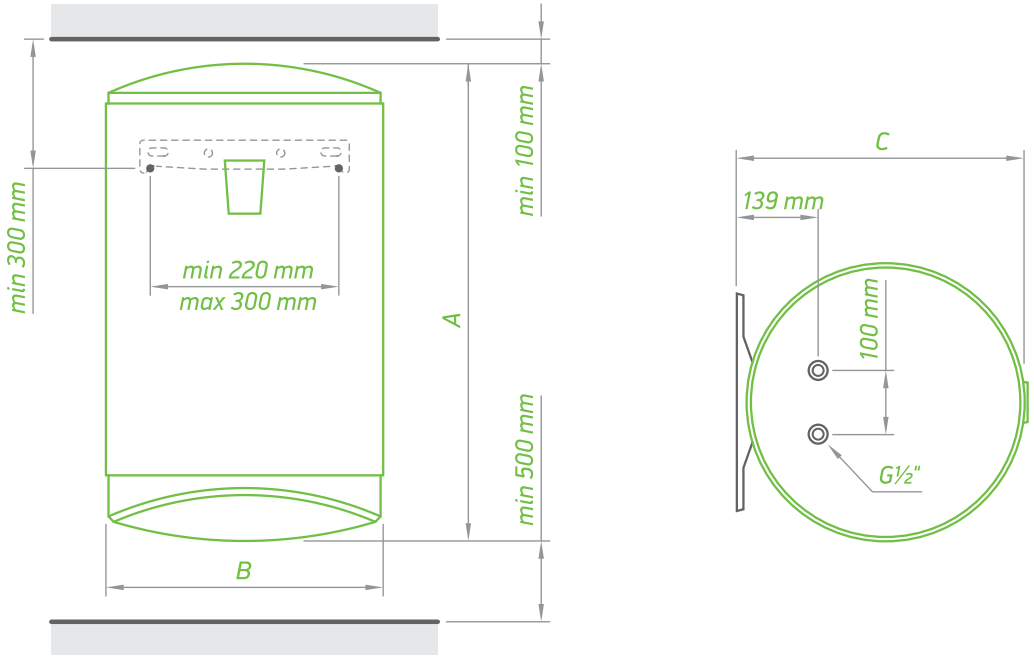

MODEL		MODECO 50	MODECO 80	MODECO 100
CODE		GCV 504720 C21 TSRC	GCV 804720 C21 TSRC	GCV 1004720 C21 TSRC
Real Volume	L	50	82	100
Diameter	mm	470	470	470
Rated power	W	2000	2000	2000
Heating time –Δ t 45 K (15 - 60° C)		1 h 18 min	2 h 08 min	2 h 36 min
Annual consumption of electricity AEC	kWh	1360	1335	2726
Energy class		C	C	C
Load profile		M	M	L
*T out of box	°C	60	60	70
**V 40	L	71	120	162
***T max	°C	70	70	70
****Max 40	L	86	145	162
Insulation	mm	32	32	32
PRODUCT DIMENSIONS				
height (A)	mm	595	845	985
width (B)	mm	470	470	470
depth (C)	mm	496	496	496

*T out of box – the optimal working temperature for the specific electric water heater model, set by the producer
**V 40 – the quantity of hot water, which the electric water heater can produce, while working at T out of box
***T max – the maximal working temperature of the electric water heater
****Max 40 – the maximal quantity of hot water, which the electric water heater can produce, while working at maximum temperature


AntiCalc
TESY



Anticalc

SUITABLE FOR HARD WATER

- ANTICALC
- ANTICALC SLIM
- ANTICALC REVERSIBLE

TESY
It's impressive







		Anticalc	Anticalc Slim	Anticalc Reversible
Innovative and convenience features	BiLight Indication	✓	✓	✓
	Adjustable termoregulator	✓	✓	✓
	Slim design		✓	
	Reversible mounting			✓
	Boost function	✓	✓	✓
Energy-saving features	No thermal bridge	✓	✓	✓
	Insutech insulation	✓	✓	✓
Security and long-life features	Dry heating element	✓	✓	✓
	Capillary thermostat	✓	✓	✓
	Crystal Tech	✓	✓	✓
	Magnesium anode protector	✓	✓	✓
	Stainless steel hot water pipe	✓	✓	✓
	Plasma welding	✓	✓	✓
	Hygienic certificate	✓	✓	✓
	Pressure relief valve	✓	✓	✓
	Anti-freeze protection	✓	✓	✓

Anticalc



Anticalc

FOR HARD AND AGRESSIVE WATER



INNOVATIVE AND CONVENIENCE FEATURES

BILIGHT indication

- Red light: Heating
- Blue light: Ready to use

BOOST FUNCTION: Turns on the second power of the heating element

EASY MAINTENANCE without preliminary draining of the water tank

MORE HOT WATER by NEW GENERATION PISTON inlet nozzle

Adjustable thermoregulator

ENERGY SAVING FEATURES

UP TO 16% LOWER THERMAL LOSSES due to NO THERMAL BRIDGE and INSUTECH technology for uniform distribution of a highly efficient insulation

ECO setting of the thermoregulator for cost-efficient and long-lasting operation.

SECURITY AND LONG PRODUCT LIFE FEATURES

LIMESCALE PROTECTION AND QUIET OPERATION ensured by dry heating element

HIGH RELIABILITY AND SAFETY of the heating process by precise **CAPILLARY TERMOSTAT**

RELIABLE ANTICORROSION PROTECTION due to **CRYSTALTECH** enamel coating of the water tank

LONGER LIFE of the water tank ensured by a magnesium anode

HIGH TEMPERATURE AND PRESSURE RESISTANCE with a stainless steel hot water pipe

DURABLE BOND between the edges of the cylinder by PLASMA WELDING

HYGIENIC CERTIFICATE

PRESSURE RELIEF VALVE to prevent excess pressure build-up

ANTI-FREEZE protection

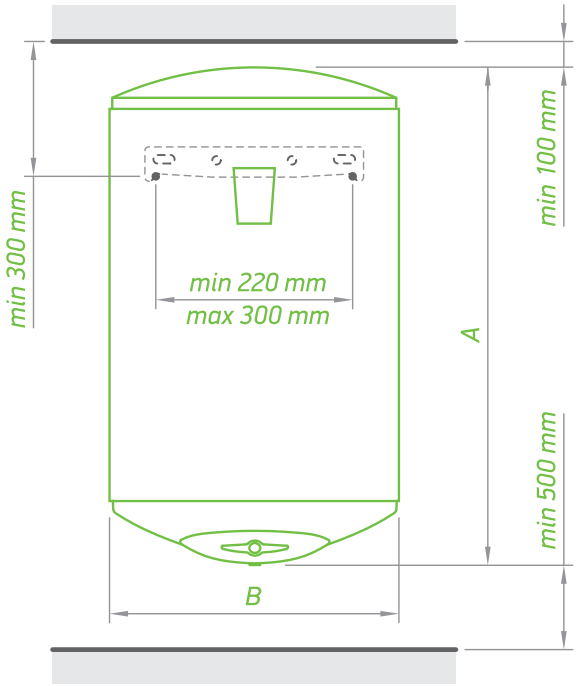

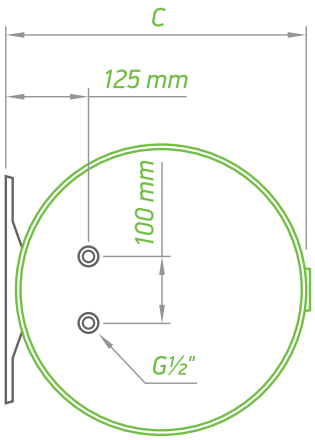

MODEL		ANTICALC 50	ANTICALC 80	ANTICALC 100	ANTICALC 120	ANTICALC 150
CODE		GCV 504416D B14 TBR(C)	GCV 804424D B14 TBR(C)	GCV 1004424D B14 TBR(C)	GCV 1204424D B14 TBR(C)	GCV 1504424D B14 TBR(C)
Real Volume	L	50	82	100	120	143
Diameter	mm	440	440	440	440	440
Rated power	W	1600/800	2400/1200	2400/1200	2400/1200	2400/1200
Heating time – Δ t 45 K (15 - 60° C)		1 h 37 min 3 h 15 min	1 h 47 min 3 h 34 min	2 h 10 min 4 h 20 min	2 h 36 min 5 h 13 min	3 h 07 min 6 h 13 min
Annual consumption of electricity AEC	kWh	1392	2748	2756	4346	4377
Energy class		C	C	C	C	C
Load profile		M	L	L	XL	XL
*T out of box	°C	60	70	60	70	65
**V 40	L	74	147	142	219	232
***T max	°C	70	70	70	70	70
****Max 40	L	88	147	170	219	257
Insulation	mm	18	18	18	18	18
PRODUCT DIMENSIONS						
height (A)	mm	608	858	998	1163	1327
width (B)	mm	440	440	440	440	440
depth (C)	mm	467	467	467	467	467

*T out of box – the optimal working temperature for the specific electric water heater model, set by the producer
**V 40 – the quantity of hot water, which the electric water heater can produce, while working at T out of box
***T max – the maximal working temperature of the electric water heater
****Max 40 – the maximal quantity of hot water, which the electric water heater can produce, while working at maximum temperature

Anticalc Slim

SLIM FOR HARD AND AGRESSIVE WATER



INNOVATIVE AND CONVENIENCE FEATURES

BILIGHT indication

- Red light: Heating
- Blue light: Ready to use

BOOST FUNCTION: Turns on the second power of the heating element

EASY MAINTENANCE without preliminary draining of the water tank

MORE HOT WATER by NEW GENERATION PISTON inlet nozzle

SAVES SPACE due to slim diameter

Adjustable thermoregulator

ENERGY SAVING FEATURES

UP TO 16% LOWER THERMAL LOSSES due to NO THERMAL BRIDGE and INSUTECH technology for uniform distribution of a highly efficient insulation

ECO setting of the thermoregulator for cost-efficient and long-lasting operation.

SECURITY AND LONG PRODUCT LIFE FEATURES

LIMESCALE PROTECTION AND QUIET OPERATION ensured by dry heating element

HIGH RELIABILITY AND SAFETY of the heating process by precise **CAPILLARY TERMOSTAT**

RELIABLE ANTICORROSION PROTECTION due to **CRYSTALTECH** enamel coating of the water tank

LONGER LIFE of the water tank ensured by a magnesium anode

HIGH TEMPERATURE AND PRESSURE RESISTANCE with a stainless steel hot water pipe

DURABLE BOND between the edges of the cylinder by PLASMA WELDING

HYGIENIC CERTIFICATE

PRESSURE RELIEF VALVE to prevent excess pressure build-up

ANTI-FREEZE protection

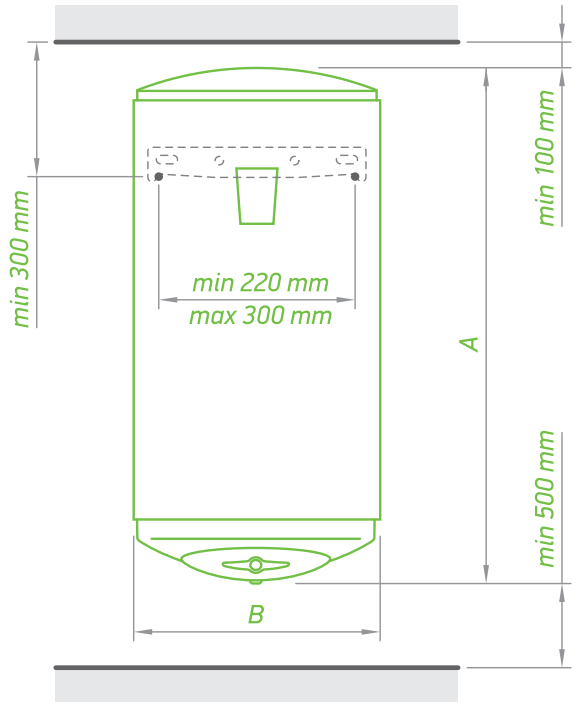

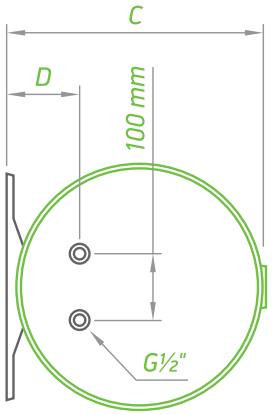

MODEL		ANTICALC SLIM 30	ANTICALC SLIM 50	ANTICALC SLIM 80
CODE		GCV 303516D B14 TBRC	GCV 503816D B14 TBRC	GCV 803816D B14 TBRC
Real Volume	L	30	50	80
Diameter	mm	353	386	386
Rated power	W	1600 / 800	1600 / 800	1600 / 800
Heating time – Δ t 45 K (15 - 60° C)		0 h 58 min 1 h 57 min	1 h 37 min 3 h 15 min	2 h 36 min 5 h 13 min
Annual consumption of electricity AEC	kWh	562	1388	1410
Energy class		C	C	C
Load profile		S	M	M
*T out of box	°C	60	60	60
**V 40	L	40	70	123
***T max	°C	70	70	70
****Max 40	L	46	86	148
Insulation	mm	18	34	34
PRODUCT DIMENSIONS				
height (A)	mm	570	818	1220
width (B)	mm	353	386	386
depth (C)	mm	380	412	412
D	mm	82	98	98

*T out of box – the optimal working temperature for the specific electric water heater model, set by the producer
**V 40 – the quantity of hot water, which the electric water heater can produce, while working at T out of box
***T max – the maximal working temperature of the electric water heater
****Max 40 – the maximal quantity of hot water, which the electric water heater can produce, while working at maximum temperature

Anticalc Reversible

REVERSIBLE, FOR HARD AND AGRESSIVE WATER

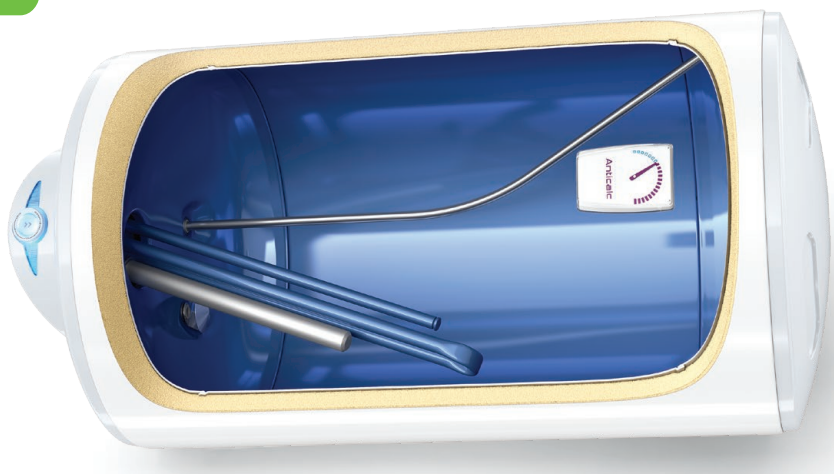

INNOVATIVE AND CONVENIENCE FEATURES

BILIGHT indication

- Red light: Heating
- Blue light: Ready to use

BOOST FUNCTION: Turns on the second power of the heating element

EASY MAINTENANCE without preliminary draining of the water tank

MORE HOT WATER by NEW GENERATION PISTON inlet nozzle

REVERSIBLE: can be installed vertically or horizontally

Adjustable thermoregulator

ENERGY SAVING FEATURES

UP TO 16% LOWER THERMAL LOSSES due to NO THERMAL BRIDGE and INSUTECH technology for uniform distribution of a highly efficient insulation

ECO setting of the thermoregulator for cost-efficient and long-lasting operation.

SECURITY AND LONG PRODUCT LIFE FEATURES

LIMESCALE PROTECTION AND QUIET OPERATION ensured by dry heating element

HIGH RELIABILITY AND SAFETY of the heating process by precise **CAPILLARY TERMOSTAT**

RELIABLE ANTICORROSION PROTECTION due to **CRYSTALTECH** enamel coating of the water tank

LONGER LIFE of the water tank ensured by a magnesium anode

HIGH TEMPERATURE AND PRESSURE RESISTANCE with a stainless steel hot water pipe

DURABLE BOND between the edges of the cylinder by PLASMA WELDING

HYGIENIC CERTIFICATE

PRESSURE RELIEF VALVE to prevent excess pressure build-up

ANTI-FREEZE protection

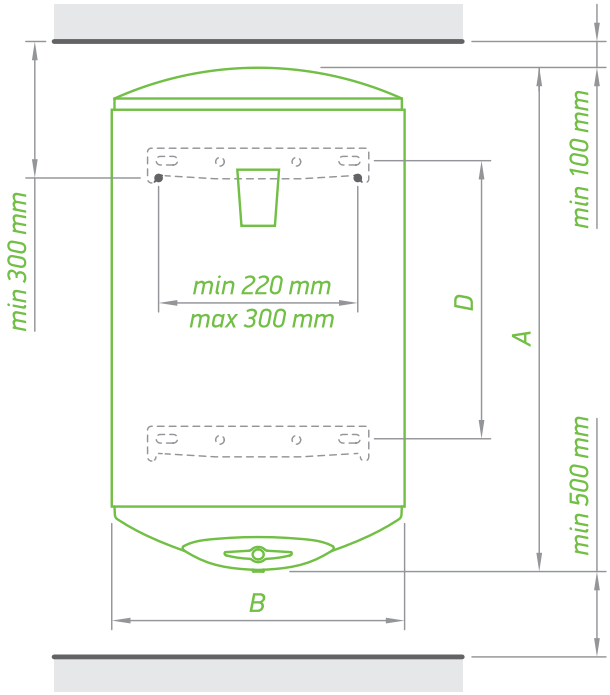

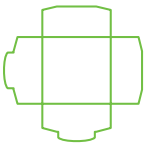

REVERSIBLE MODELS

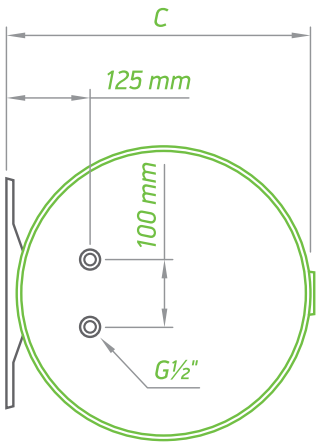

MODEL		ANTICALC REV 50	ANTICALC REV 80	ANTICALC REV 100	ANTICALC REV 120	ANTICALC REV 150
CODE		GCR 504416D B14 TBRC	GCR 804424D B14 TBRC	GCR 1004424D B14 TBRC	GCR 1204424D B14 TBRC	GCR 1504424D B14 TBRC
Real Volume	L	50	82	100	120	143
Diameter	mm	440	440	440	440	440
Rated power	W	1600 / 800	2400 / 1200	2400 / 1200	2400 / 1200	2400 / 1200
Heating time – Δ t 45 K (15 - 60° C)		1 h 37 min 3 h 15 min	1 h 47 min 3 h 34 min	2 h 10 min 4 h 20 min	2 h 36 min 5 h 13 min	3 h 07 min 6 h 13 min
Annual consumption of electricity AEC	kWh	1392	2748	2756	4346	4377
Energy class		C	C	C	C	C
Load profile		M	L	L	XL	XL
*T out of box	°C	60	70	60	70	65
**V 40	L	74	147	142	219	232
***T max	°C	70	70	70	70	70
****Max 40	L	88	147	170	219	257
Insulation	mm	18	18	18	18	18
PRODUCT DIMENSIONS						
height (A)	mm	608	858	998	1163	1327
width (B)	mm	440	440	440	440	440
depth (C)	mm	467	467	467	467	467
D	mm	183	407	552	702	827

THE PRESENTED DATA ARE VALID FOR VERTICAL INSTALLATION

*T out of box – the optimal working temperature for the specific electric water heater model, set by the producer
**V 40 – the quantity of hot water, which the electric water heater can produce, while working at T out of box
***T max – the maximal working temperature of the electric water heater
****Max 40 – the maximal quantity of hot water, which the electric water heater can produce, while working at maximum temperature


BiLight
TESY



BiLight

TESY BESTSELLER

- BILIGHT SMART
- BILIGHT
- BILIGHT SLIM
- BILIGHT HORIZONTAL
- BILIGHT FLOOR

TESY
It's impressive



		BiLight Smart	BiLight	BiLight Slim
Innovative and convenience features	BiLight Indication		✓	✓
	TriLight Indication	✓		
	Adjustable termoregulator	✓	✓	✓
	Slim design	✓		✓
	New Piston nozzle	✓	✓	✓
	Copper heating element	✓	✓	✓
Energy-saving features	Eco Smart mode	✓		
	No thermal bridge	✓	✓	✓
	Insutech insulation	✓	✓	✓
Security and long-life features	Crystal Tech	✓	✓	✓
	Magnesium anode protector	✓	✓	✓
	Stainless steel hot water pipe	✓	✓	✓
	Hygienic certificate	✓	✓	✓
	Plasma welding	✓	✓	✓
	Pressure relief valve	✓	✓	✓
	Anti-freeze protection	✓	✓	✓

		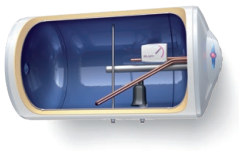 BiLight Horizontal	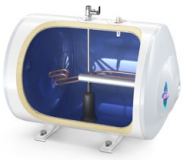 BiLight Horizontal Floor
Innovative and convenience features	BiLight Indication	✓	✓
	TriLight Indication		
	Adjustable termoregulator	✓	✓
	Slim design		
	New Piston nozzle	✓	✓
	Copper heating element	✓	✓
Energy-saving features	Eco Smart mode		
	No thermal bridge	✓	✓
	Eco Smart mode	✓	✓
Security and long-life features	Crystal Tech	✓	✓
	Magnesium anode protector	✓	✓
	Stainless steel hot water pipe	✓	✓
	Hygienic certificate	✓	✓
	Plasma welding	✓	✓
	Pressure relief valve	✓	✓
	Anti-freeze protection	✓	✓

BiLight Smart

**ULTRA SLIM,
SMART,
MORE HOT WATER**



INNOVATIVE AND CONVENIENCE FEATURES

Tri-Light indication
- Red light: Heating
- Blue light: Ready to use
- Green light: Eco Smart mode

MORE HOT WATER by NEW GENERATION PISTON inlet nozzle and REAL VOLUME of the water tank

SAVES SPACE due to ultra slim 35 cm diameter

Adjustable thermoregulator

ENERGY SAVING FEATURES

Delivering the **HIGHEST ENERGY CLASS** in its category

UP TO 18% ELECTRICITY SAVINGS on a weekly basis by ECO SMART self-learning regime

UP TO 16% LOWER THERMAL LOSSES due to NO THERMAL BRIDGE and INSUTECH technology for uniform distribution of a highly efficient insulation

SECURITY AND LONG PRODUCT LIFE FEATURES

RELIABLE ANTICORROSION PROTECTION due to **CRYSTALTECH** enamel coating of the water tank

LONGER LIFE of the water tank ensured by a magnesium anode

HIGH TEMPERATURE AND PRESSURE RESISTANCE with a stainless steel hot water pipe

DURABLE BOND between the edges of the cylinder by PLASMA WELDING

HYGIENIC CERTIFICATE

PRESSURE RELIEF VALVE to prevent excess pressure build-up

ANTI-FREEZE protection

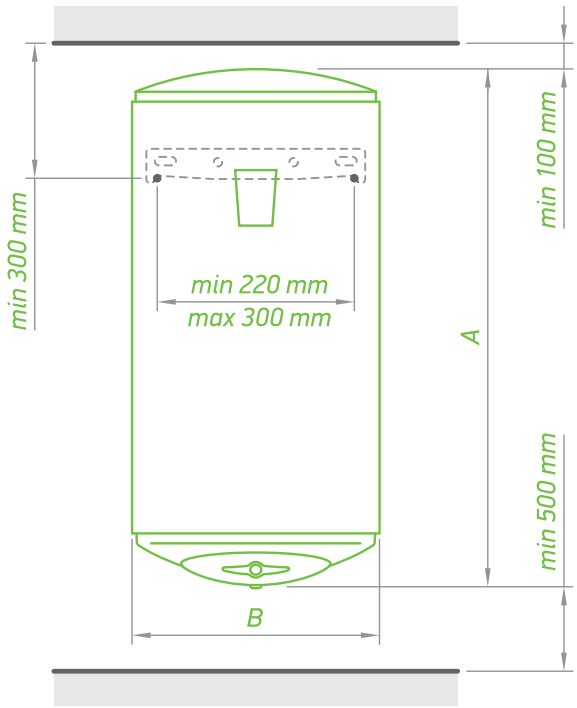

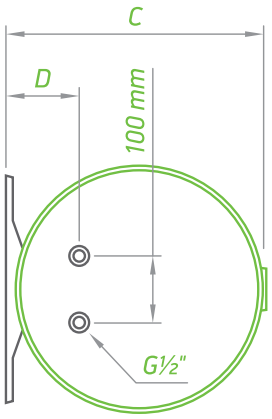

MODEL		BILIGHT SMART 80
CODE		GCV 803530 B12 TSRE
Real Volume	L	80
Diameter	mm	353
Rated power	W	3000
Heating time –Δ t 45 K (15 - 60° C)		1 h 23 min
Annual consumption of electricity AEC	kWh	1308
Energy class		B
Load profile		M
*T out of box	°C	70
**V 40	L	145
***T max	°C	70
****Max 40	L	145
PRODUCT DIMENSIONS		
height (A)	mm	1205
width (B)	mm	353
depth (C)	mm	380
(D)	mm	82

*T out of box – the optimal working temperature for the specific electric water heater model, set by the producer
**V 40 – the quantity of hot water, which the electric water heater can produce, while working at T out of box
***T max – the maximal working temperature of the electric water heater
****Max 40 – the maximal quantity of hot water, which the electric water heater can produce, while working at maximum temperature

BiLight

BESTSELLER



INNOVATIVE AND CONVENIENCE FEATURES

BILIGHT indication
- Red light: Heating
- Blue light: Ready to use

MORE HOT WATER by NEW GENERATION PISTON inlet nozzle and REAL VOLUME of the water tank

Adjustable thermoregulator

ENERGY SAVING FEATURES

UP TO 16% LOWER THERMAL LOSSES due to NO THERMAL BRIDGE and INSUTECH technology for uniform distribution of a highly efficient insulation

ECO setting of the thermoregulator for cost-efficient and long-lasting operation.

SECURITY AND LONG PRODUCT LIFE FEATURES

RELIABLE ANTICORROSION PROTECTION due to **CRYSTALTECH** enamel coating of the water tank

LONGER LIFE of the water tank ensured by a magnesium anode

HIGH TEMPERATURE AND PRESSURE RESISTANCE with a stainless steel hot water pipe

DURABLE BOND between the edges of the cylinder by PLASMA WELDING

HYGIENIC CERTIFICATE

PRESSURE RELIEF VALVE to prevent excess pressure build-up

ANTI-FREEZE protection

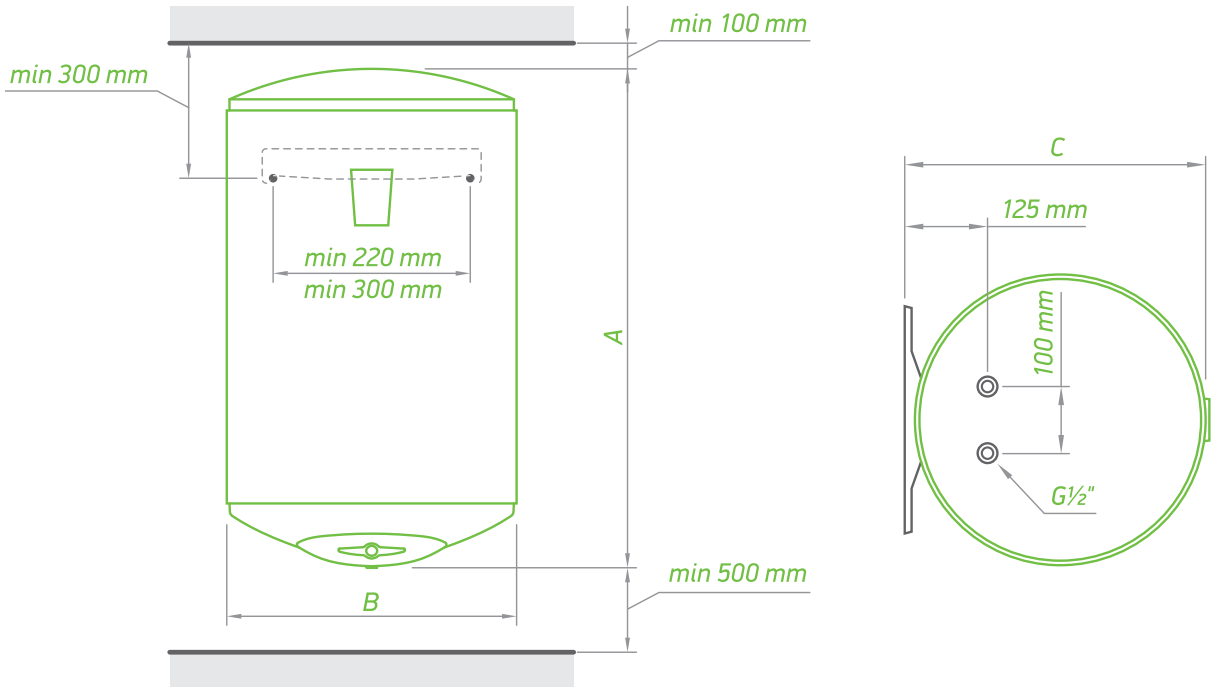

MODEL		BILIGHT 50	BILIGHT 80	BILIGHT 100	BILIGHT 120	BILIGHT 150
CODE		GCV 504415 B11TSR(C)	GCV 804420 B11TSR(C)	GCV 1004420 B11TSR(C)	GCV 1204420 B11TSR(C)	GCV 1504420 B11TSR(C)
Real Volume	L	50	82	100	120	143
Diameter	mm	440	440	440	440	440
Rated power	W	1500	2000	2000	2000	2000
Heating time – Δ t 45 K (15 - 60° C)		1 h 44 min	2 h 08 min	2 h 36 min	3 h 08 min	3 h 44 min
Annual consumption of electricity AEC	kWh	1421	2762	2734	4406	4404
Energy class		C	C	C	C	C
Load profile		M	L	L	XL	XL
*T out of box	°C	60	70	60	70	65
**V 40	L	77	145	150	218	233
***T max	°C	70	70	70	70	70
****Max 40	L	86	145	176	218	257
Insulation	mm	18	18	18	18	18
PRODUCT DIMENSIONS						
height (A)	mm	595	845	985	1150	1315
width (B)	mm	440	440	440	440	440
depth (C)	mm	467	467	467	467	467

*T out of box – the optimal working temperature for the specific electric water heater model, set by the producer
**V 40 – the quantity of hot water, which the electric water heater can produce, while working at T out of box
***T max – the maximal working temperature of the electric water heater
****Max 40 – the maximal quantity of hot water, which the electric water heater can produce, while working at maximum temperature

BiLight Slim

SLIM, MORE HOT WATER



INNOVATIVE AND CONVENIENCE FEATURES

BILIGHT indication
- Red light: Heating
- Blue light: Ready to use

MORE HOT WATER by NEW GENERATION PISTON inlet nozzle and REAL VOLUME of the water tank

SAVES SPACE due to slim diameter

Adjustable thermoregulator

ENERGY SAVING FEATURES

UP TO 16% LOWER THERMAL LOSSES due to NO THERMAL BRIDGE and INSUTECH technology for uniform distribution of a highly efficient insulation

ECO setting of the thermoregulator for cost-efficient and long-lasting operation.

SECURITY AND LONG PRODUCT LIFE FEATURES

RELIABLE ANTICORROSION PROTECTION due to **CRYSTALTECH** enamel coating of the water tank

LONGER LIFE of the water tank ensured by a magnesium anode

HIGH TEMPERATURE AND PRESSURE RESISTANCE with a stainless steel hot water pipe

DURABLE BOND between the edges of the cylinder by PLASMA WELDING

HYGIENIC CERTIFICATE

PRESSURE RELIEF VALVE to prevent excess pressure build-up

ANTI-FREEZE protection

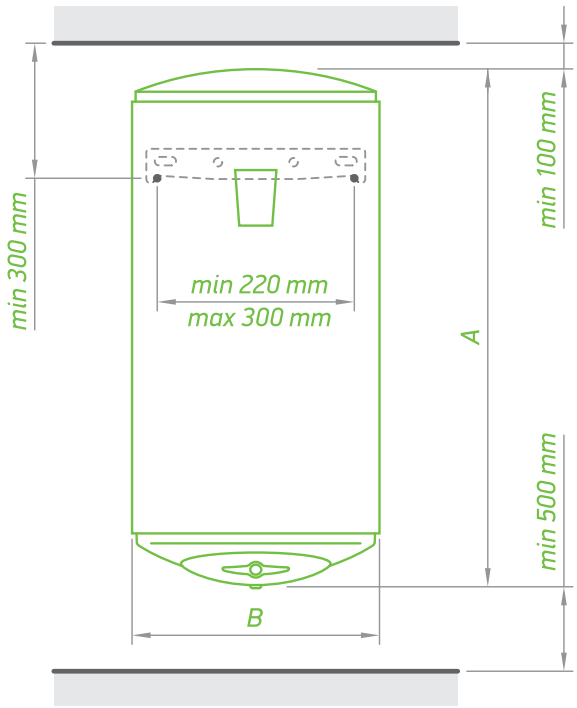

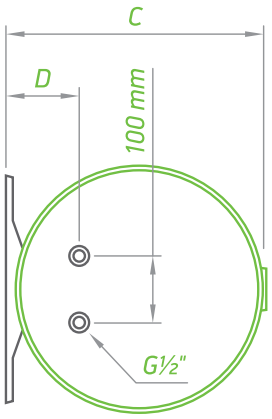

MODEL		BILIGHT SLIM 30	BILIGHT SLIM 50	BILIGHT SLIM 80
CODE		GCV 303512 B11 TSRC	GCV 503820 B11 TSR	GCV 803820 B11 TSRC
Real Volume	L	30	50	81
Diameter	mm	353	386	386
Rated power	W	1200	2000	2000
Heating time – Δ t 45 K (15 - 60° C)		1 h 18 min	1 h 18 min	2 h 05 min
Annual consumption of electricity AEC	kWh	571	1402	1410
Energy class		C	C	C
Load profile		S	M	M
*T out of box	°C	60	60	60
**V 40	L	44	70	117
***T max	°C	70	70	70
****Max 40	L	49	87	153
Insulation	mm	18	34	34
PRODUCT DIMENSIONS				
height (A)	mm	557	803	1205
width (B)	mm	353	386	386
depth (C)	mm	380	412	412
D	mm	82	98	98

*T out of box – the optimal working temperature for the specific electric water heater model, set by the producer
**V 40 – the quantity of hot water, which the electric water heater can produce, while working at T out of box
***T max – the maximal working temperature of the electric water heater
****Max 40 – the maximal quantity of hot water, which the electric water heater can produce, while working at maximum temperature

BiLight Horizontal

UP TO 40% MORE HOT WATER*

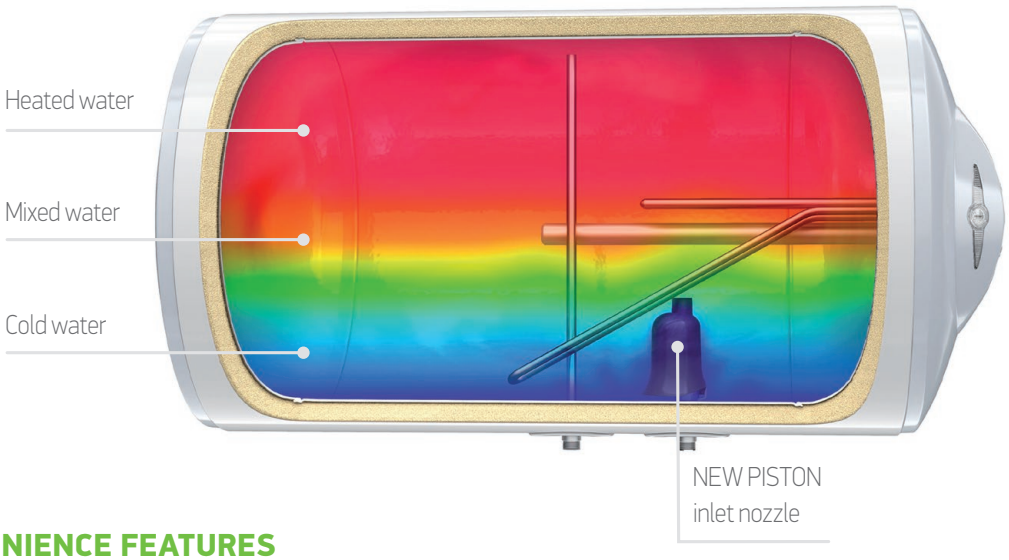

INNOVATIVE AND CONVENIENCE FEATURES

BILIGHT indication
- Red light: Heating
- Blue light: Ready to use

MORE HOT WATER by NEW GENERATION PISTON inlet nozzle
With the NEW PISTON nozzle a horizontal TESY water heater delivers a comparable quantity of hot water as a vertical one.

Adjustable thermoregulator

ENERGY SAVING FEATURES

UP TO 16% LOWER THERMAL LOSSES due to NO THERMAL BRIDGE and INSUTECH technology for uniform distribution of a highly efficient insulation

ECO setting of the thermoregulator for cost-efficient and long-lasting operation.

SECURITY AND LONG PRODUCT LIFE FEATURES

RELIABLE ANTICORROSION PROTECTION due to **CRYSTALTECH** enamel coating of the water tank

LONGER LIFE of the water tank ensured by a magnesium anode

HIGH TEMPERATURE AND PRESSURE RESISTANCE with a stainless steel hot water pipe

DURABLE BOND between the edges of the cylinder by PLASMA WELDING

HYGIENIC CERTIFICATE

PRESSURE RELIEF VALVE to prevent excess pressure build-up

ANTI-FREEZE protection

* For TESY BiLight horizontal models with NEW PISTON nozzle, compared to TESY BiLight horizontal models with previous PISTON nozzle.
**For models 30, 80, 100, 120 and 150 l

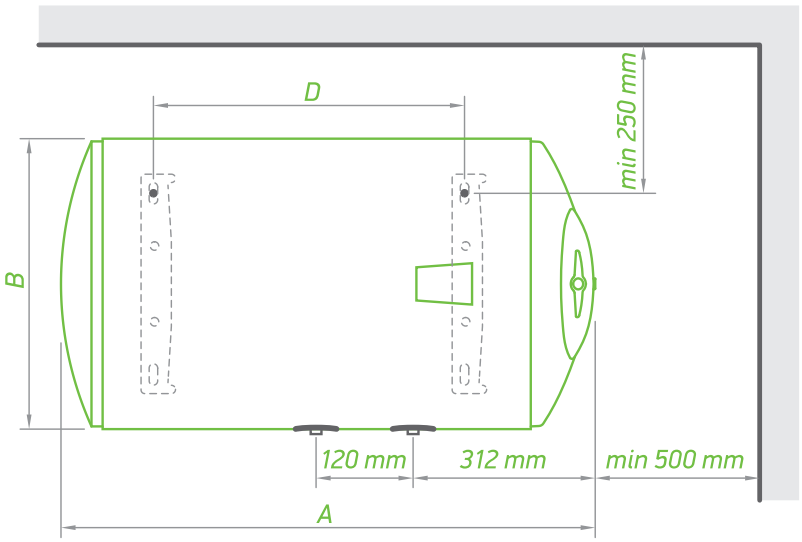

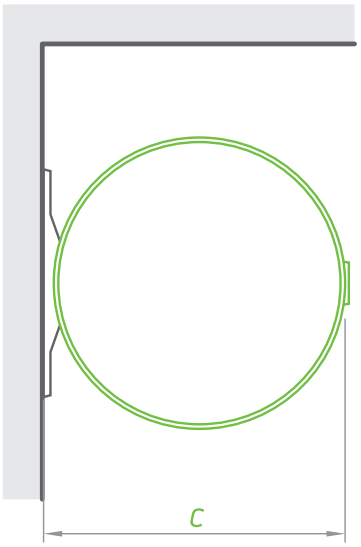

MODEL		BILIGHT SLIM 30 H	BILIGHT SLIM 50 H	BILIGHT 80 H	BILIGHT 100 H	BILIGHT 120 H	BILIGHT 150 H
CODE		GCHL 303515 B12 TSRC	GCH(L) 503520 B12 TSR(C)	GCH(L) 804420 B12 TSR(C)	GCH(L) 1004420 B12 TSR(C)	GCH 1204430 B12 TSR	GCH 1504430 B12 TSRC
Real Volume	L	30	50	82	100	120	143
Diameter	mm	353	353	440	440	440	440
Rated power	W	1500	2000	2000	2000	3000	3000
Heating time – Δ t 45 K (15 - 60° C)		1h 02 min	1 h 18 min	2 h 08 min	2 h 36 min	2 h 05 min	2 h 29 min
Annual consumption of electricity AEC	kWh	577	1418	1422	2770	2727	4413
Energy class		C	C	C	C	C	C
Load profile		S	M	M	L	L	XL
*T out of box	°C	60	70	60	60	70	75
**V 40	L	30	78	111	138	160	240
***T max	°C	70	70	70	75	70	70
****Max 40	L	36	78	146	177	213	240
Insulation	mm	18	18	18	18	18	18
PRODUCT DIMENSIONS							
height (B)	mm	353	353	440	440	440	440
width (A)	mm	566	803	855	995	1160	1325
depth (C)	mm	380	380	467	467	467	467
D	mm	241	411	407	552	702	927

*T out of box – the optimal working temperature for the specific electric water heater model, set by the producer
**V 40 – the quantity of hot water, which the electric water heater can produce, while working at T out of box
***T max – the maximal working temperature of the electric water heater
****Max 40 – the maximal quantity of hot water, which the electric water heater can produce, while working at maximum temperature

BiLight Horizontal Floor

MORE HOT WATER

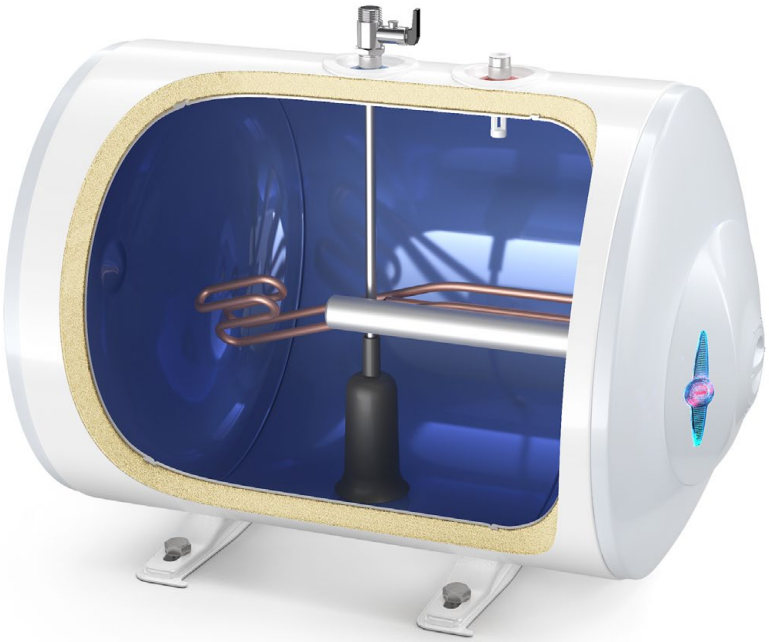

INNOVATIVE AND CONVENIENCE FEATURES

BILIGHT indication
- Red light: Heating
- Blue light: Ready to use

MORE HOT WATER by NEW GENERATION PISTON inlet nozzle and REAL VOLUME of the water tank

Adjustable thermoregulator

ENERGY SAVING FEATURES

UP TO 16% LOWER THERMAL LOSSES due to NO THERMAL BRIDGE and INSUTECH technology for uniform distribution of a highly efficient insulation

ECO setting of the thermoregulator for cost-efficient and long-lasting operation.

SECURITY AND LONG PRODUCT LIFE FEATURES

RELIABLE ANTICORROSION PROTECTION due to **CRYSTALTECH** enamel coating of the water tank

LONGER LIFE of the water tank ensured by a magnesium anode

HIGH TEMPERATURE AND PRESSURE RESISTANCE with a stainless steel hot water pipe

DURABLE BOND between the edges of the cylinder by PLASMA WELDING

HYGIENIC CERTIFICATE

PRESSURE RELIEF VALVE to prevent excess pressure build-up

ANTI-FREEZE protection

BiLight Horizontal Floor | Technical information

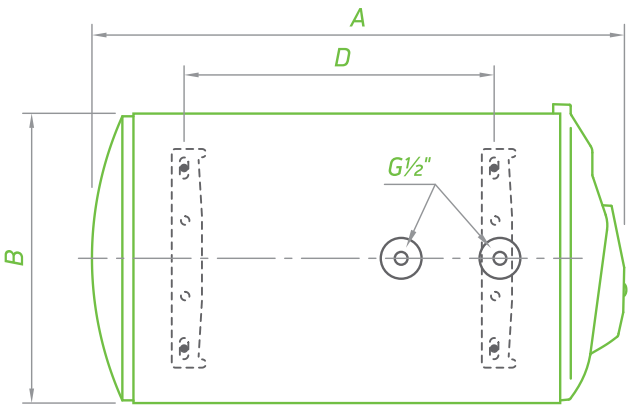

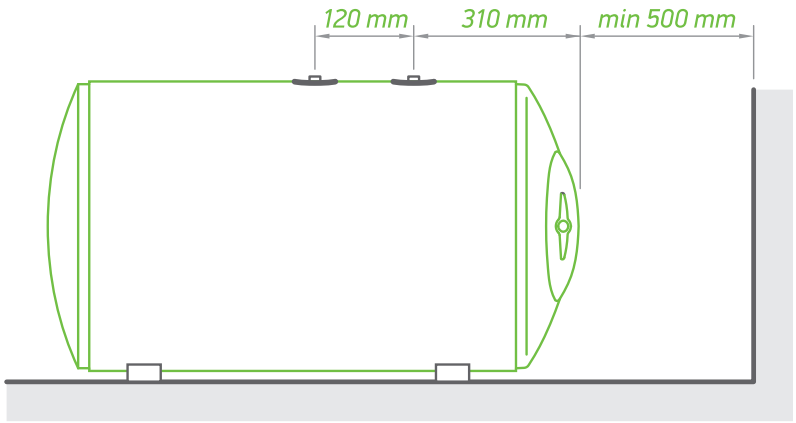

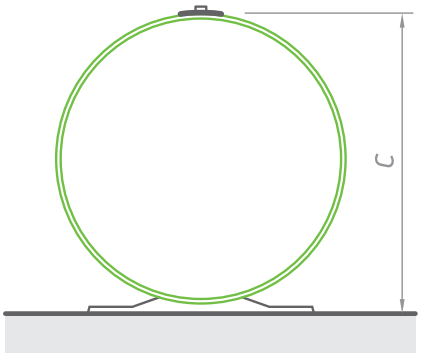

MODEL		BILIGHT FLOOR 60	BILIGHT FLOOR 80	BILIGHT FLOOR 100	BILIGHT FLOOR 120
CODE		GCHF 604420 B12 SR	GCHF 804420 B12 SR	GCHF 1004420 B12 SR	GCHF 1204420 B12 SR
Real Volume	L	60	82	100	120
Diameter	mm	440	440	440	440
Rated power	W	2000	2000	2000	2000
Heating time – Δ t 45 K (15 - 60° C)		1 h 34 min	2 h 08 min	2 h 36 min	3 h 08 min
Annual consumption of electricity AEC	kWh	1419	2766	2750	2756
Energy class		C	C	C	C
Load profile		M	L	L	L
*T out of box	°C	60	70	60	60
**V 40	L	87	149	145	177
***T max	°C	70	70	70	70
****Max 40	L	116	149	180	234
Insulation	mm	18	18	18	18
PRODUCT DIMENSIONS					
height (B)	mm	440	440	440	440
width (A)	mm	675	855	995	1160
depth (C)	mm	467	467	467	467
D	mm	411	407	552	701

*T out of box – the optimal working temperature for the specific electric water heater model, set by the producer
**V 40 – the quantity of hot water, which the electric water heater can produce, while working at T out of box
***T max – the maximal working temperature of the electric water heater
****Max 40 – the maximal quantity of hot water, which the electric water heater can produce, while working at maximum temperature


TESY

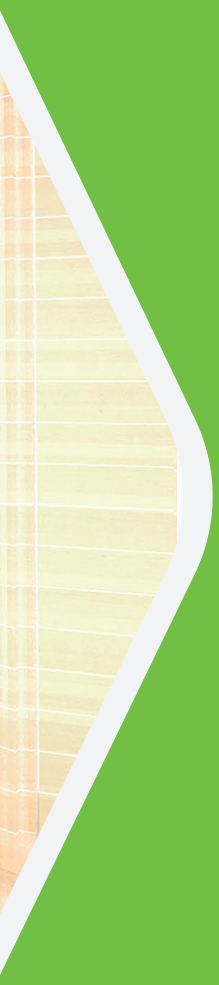

SimpatEco

TESY BASE WATER HEATER

SimpatEco

SIMPLE AND EFFICIENT



INNOVATIVE AND CONVENIENCE FEATURES

Adjustable thermoregulator

ENERGY SAVING FEATURES

UP TO 16% LOWER THERMAL LOSSES due to NO THERMAL BRIDGE and INSUTECH technology for uniform distribution of a highly efficient insulation

SECURITY AND LONG PRODUCT LIFE FEATURES

RELIABLE ANTICORROSION PROTECTION due to **CRYSTALTECH** enamel coating of the water tank

LONGER LIFE of the water tank ensured by a magnesium anode

HIGH TEMPERATURE AND PRESSURE RESISTANCE with a stainless steel hot water pipe

DURABLE BOND between the edges of the cylinder by PLASMA WELDING

HYGIENIC CERTIFICATE

PRESSURE RELIEF VALVE to prevent excess pressure build-up

ANTI-FREEZE protection

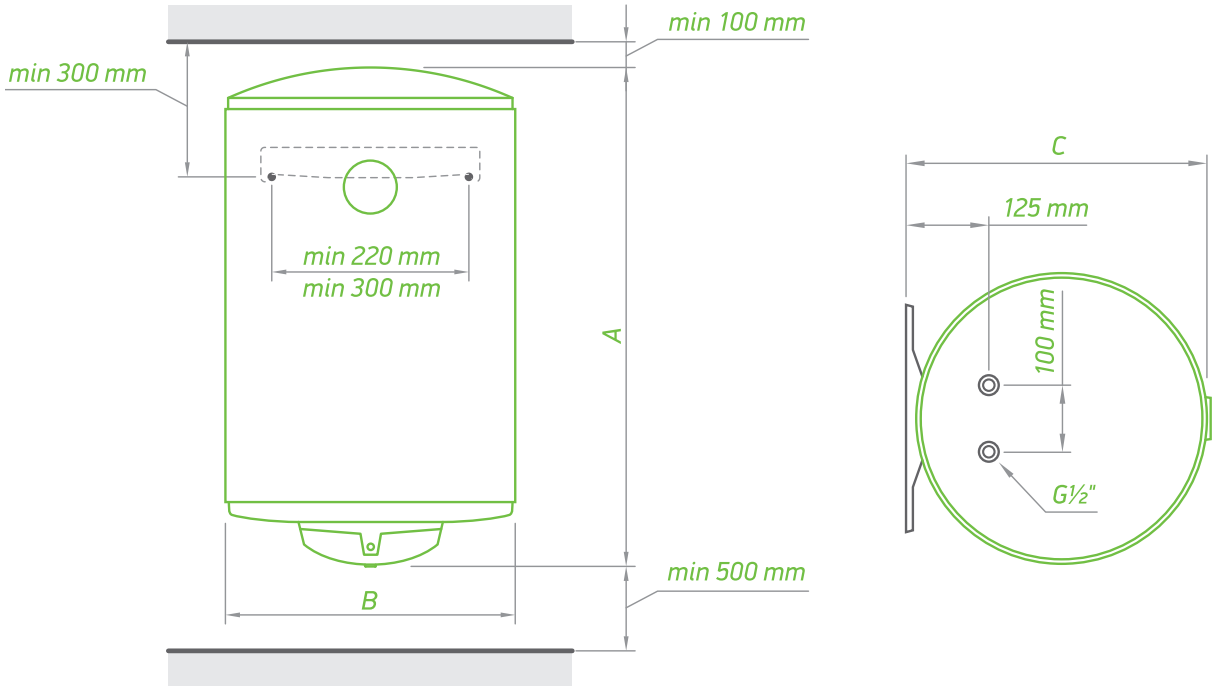

MODEL		SIMPATECO 50	SIMPATECO 80	SIMPATECO 100
CODE		GCV 504415 D07 TR(C)	GCVOL 804415 D07 TR(C)	GCV 1004415 D07 TR(C)
Real Volume	L	50	71	100
Diameter	mm	440	440	440
Rated power	W	1500	1500	1500
Heating time – Δ t 45 K (15 - 60° C)		1 h 44 min	2 h 28 min	3 h 29 min
Annual consumption of electricity AEC	kWh	1421	1424	2687
Energy class		C	C	C
Load profile		M	M	L
*T out of box	°C	60	60	60
**V 40	L	77	91	142
***T max	°C	70	70	70
****Max 40	L	86	109	171
PRODUCT DIMENSIONS				
height (A)	mm	593	736	983
width (B)	mm	440	440	440
depth (C)	mm	468	468	468

*T out of box – the optimal working temperature for the specific electric water heater model, set by the producer
**V 40 – the quantity of hot water, which the electric water heater can produce, while working at T out of box
***T max – the maximal working temperature of the electric water heater
****Max 40 – the maximal quantity of hot water, which the electric water heater can produce, while working at maximum temperature


TESY



MaxEau

HIGH CAPACITY MODELS WITH THICK INSULATION

- MAXEAU CERAMIC
- MAXEAU

TESY
It's impressive



MaxEau Ceramic



MaxEau

Innovative and convenience features	Adjustable termoregulator	✓	✓
	Copper heating element		✓
Energy-saving features	No thermal bridge	✓	✓
	Insutech insulation	✓	✓
Security and long-life features	Ceramic heating element	✓	
	Capillary thermostat	✓	✓
	Crystal Tech	✓	✓
	Magnesium anode protector	✓	✓
	Stainless steel hot water pipe	✓	✓
	Plasma welding	✓	✓
	Hygienic certificate	✓	✓
	Pressure relief valve	✓	✓
	Anti-freeze protection	✓	✓

MaxEau



MaxEau Ceramic

FOR HARD AND AGRESSIVE WATER, LONG LIFE



INNOVATIVE AND CONVENIENCE FEATURES

EASY MAINTENANCE without preliminary draining of the water tank

Adjustable thermoregulator

ENERGY SAVING FEATURES

UP TO 16% LOWER THERMAL LOSSES due to NO THERMAL BRIDGE and INSUTECH technology for uniform distribution of a highly efficient insulation

ECO setting of the thermoregulator for cost-efficient and long-lasting operation.

SECURITY AND LONG PRODUCT LIFE FEATURES

LIMESCALE PROTECTION AND QUIET OPERATION ensured by the ceramic heating element

HIGH RELIABILITY AND SAFETY of the heating process by precise **CAPILLARY TERMOSTAT**

RELIABLE ANTICORROSION PROTECTION due to **CRYSTALTECH** enamel coating of the water tank

LONGER LIFE of the water tank ensured by a magnesium anode

HIGH TEMPERATURE AND PRESSURE RESISTANCE with a stainless steel hot water pipe

DURABLE BOND between the edges of the cylinder by PLASMA WELDING

HYGIENIC CERTIFICATE

PRESSURE RELIEF VALVE to prevent excess pressure build-up

ANTI-FREEZE protection

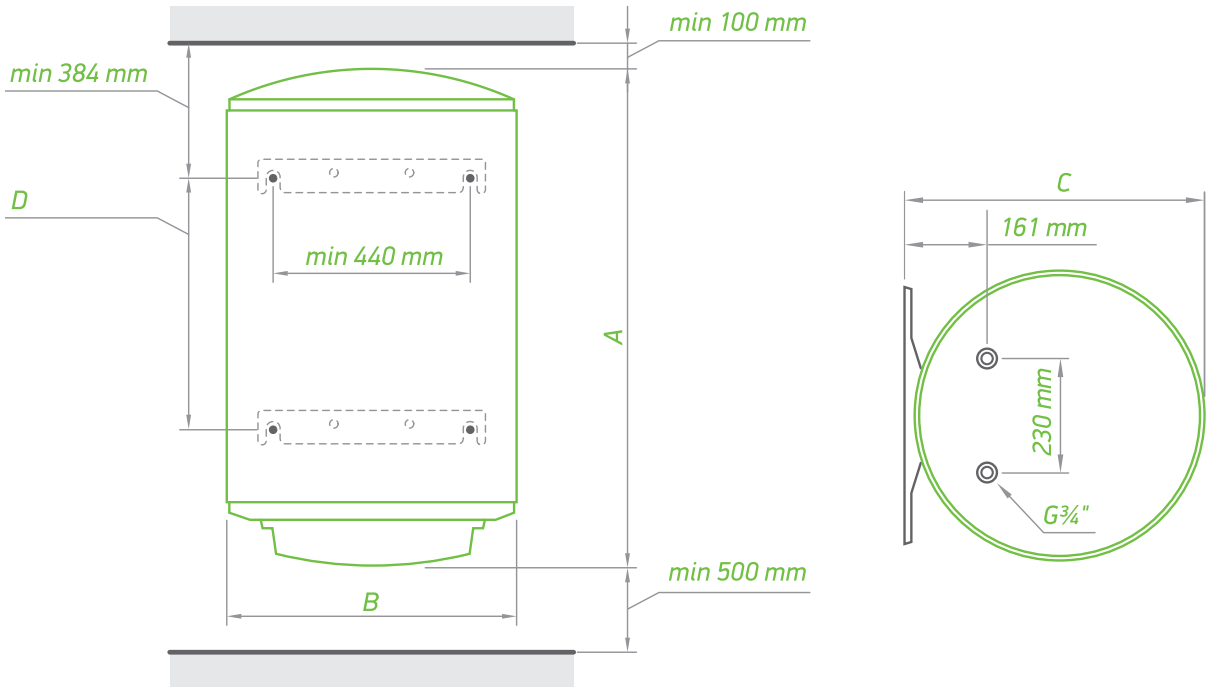

MODEL		MAXEAU CERAMIC 150	MAXEAU CERAMIC 200
CODE		GCV 1505624C D06 S2RC	GCV 2005624C D06 S2RC
Real Volume	L	150	200
Diameter	mm	560	560
Rated power	W	1200 / 2400	1200 / 2400
Heating time –Δ t 45 K (15 - 60° C)		6 h 31 min 3 h 15 min	8 h 42 min 4 h 21 min
Annual consumption of electricity AEC	kWh	2726	2711
Energy class		C	C
Load profile		L	L
*T out of box	°C	70	60
**V 40	L	271	290
***T max	°C	70	70
****Max 40	L	271	354
Insulation	mm	40	40
PRODUCT DIMENSIONS			
height (A)	mm	1083	1357
width (B)	mm	560	560
depth (C)	mm	567	567
(D)	mm	500	800

*T out of box – the optimal working temperature for the specific electric water heater model, set by the producer
**V 40 – the quantity of hot water, which the electric water heater can produce, while working at T out of box
***T max – the maximal working temperature of the electric water heater
****Max 40 – the maximal quantity of hot water, which the electric water heater can produce, while working at maximum temperature

MaxEau

MORE HOT WATER



INNOVATIVE AND CONVENIENCE FEATURES

Adjustable thermoregulator

ENERGY SAVING FEATURES

UP TO 16% LOWER THERMAL LOSSES due to NO THERMAL BRIDGE and INSUTECH technology for uniform distribution of a highly efficient insulation

ECO setting of the thermoregulator for cost-efficient and long-lasting operation.

SECURITY AND LONG PRODUCT LIFE FEATURES

HIGH RELIABILITY AND SAFETY of the heating process by precise **CAPILLARY TERMOSTAT**

RELIABLE ANTICORROSION PROTECTION due to **CRYSTALTECH** enamel coating of the water tank

LONGER LIFE of the water tank ensured by a magnesium anode

HIGH TEMPERATURE AND PRESSURE RESISTANCE with a stainless steel hot water pipe

DURABLE BOND between the edges of the cylinder by PLASMA WELDING

HYGIENIC CERTIFICATE

PRESSURE RELIEF VALVE to prevent excess pressure build-up

ANTI-FREEZE protection

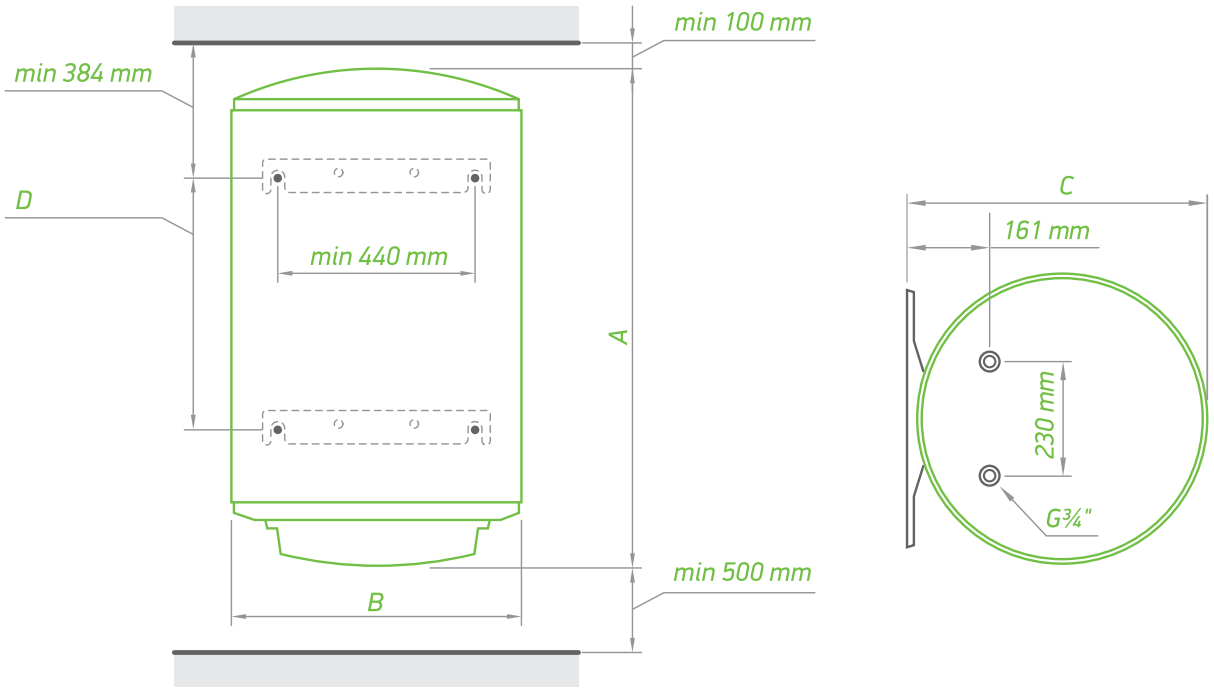

MODEL		MAXEAU 150	MAXEAU 200
CODE		GCV 1505620 D06 SRC	GCV 2005620 D06 SRC
Real Volume	L	150	200
Diameter	mm	560	560
Rated power	W	2000	2000
Heating time –Δ t 45 K (15 - 60° C)		3 h 55 min	5 h 13 min
Annual consumption of electricity AEC	kWh	2741	2755
Energy class		C	C
Load profile		L	L
*T out of box	°C	60	60
**V 40	L	210	304
***T max	°C	70	70
****Max 40	L	261	358
Insulation	mm	40	40
PRODUCT DIMENSIONS			
height (A)	mm	1083	1357
width (B)	mm	560	560
depth (C)	mm	567	567
(D)	mm	500	800

*T out of box – the optimal working temperature for the specific electric water heater model, set by the producer
**V 40 – the quantity of hot water, which the electric water heater can produce, while working at T out of box
***T max – the maximal working temperature of the electric water heater
****Max 40 – the maximal quantity of hot water, which the electric water heater can produce, while working at maximum temperature



TESY



ELECTRIC WATER HEATERS WITH **HEAT EXCHANGERS**



		BiLight with classic heat exchanger	ModEco Ceramic with highly-efficient heat exchanger	ModEco with heat exchanger	BiLight with higly-efficient heat exchanger	BiLight Slim with higly-efficient heat exchanger
Innovative and convenience features	BiLight Indication	✓	✓	✓	✓	✓
	Adjustable termoregulator	✓	✓	✓	✓	✓
	Slim design					✓
	Suitable for connection to pellet boiler, gas boiler and solid fuel boiler	✓	✓	✓	✓	✓
	Suitable for connection to solar panels, heat pumps		✓	✓	✓	✓
	Suitable for connection to two separate energy sources					
	Copper heating element	✓		✓	✓	✓
Energy-saving features	Insutech insulation	✓	✓	✓	✓	✓
	No thermal bridge	✓	✓	✓	✓	✓
Security and long-life features	Ceramic heating element		✓			
	Crystal Tech	✓	✓	✓	✓	✓
	Stainless steel hot water pipe	✓	✓	✓	✓	✓
	Magnesium anode protector	✓	✓	✓	✓	✓
	Safety valve	✓	✓	✓	✓	✓
	Hygienic certificate	✓	✓	✓	✓	✓
	Plasma welding	✓	✓	✓	✓	✓
	Anti-freeze protection	✓	✓	✓	✓	✓

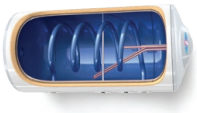




		BiLight Horizontal with higly-efficient heat exchanger	MaxEau Ceramic with higly-efficient heat exchanger	ModEco with a double-integrated heat exchanger	BiLight with a double-integrated heat exchanger
Innovative and convenience features	BiLight Indication	✓		✓	✓
	Adjustable termoregulator	✓	✓	✓	✓
	Slim design				
	Suitable for connection to pellet boiler, gas boiler and solid fuel boiler	✓	✓	✓	✓
	Suitable for connection to solar panels, heat pumps	✓	✓	✓	✓
	Suitable for connection to two separate energy sources			✓	✓
	Copper heating element	✓		✓	✓
Energy-saving features	Insutech insulation	✓	✓	✓	✓
	No thermal bridge	✓	✓	✓	✓
Security and long-life features	Ceramic heating element		✓		
	Crystal Tech	✓	✓	✓	✓
	Stainless steel hot water pipe	✓	✓	✓	✓
	Magnesium anode protector	✓	✓	✓	✓
	Safety valve	✓	✓	✓	✓
	Hygienic certificate	✓	✓	✓	✓
	Plasma welding	✓	✓	✓	✓
	Anti-freeze protection	✓	✓	✓	✓

INSTALLATION SCHEME 1

Pellet Boiler

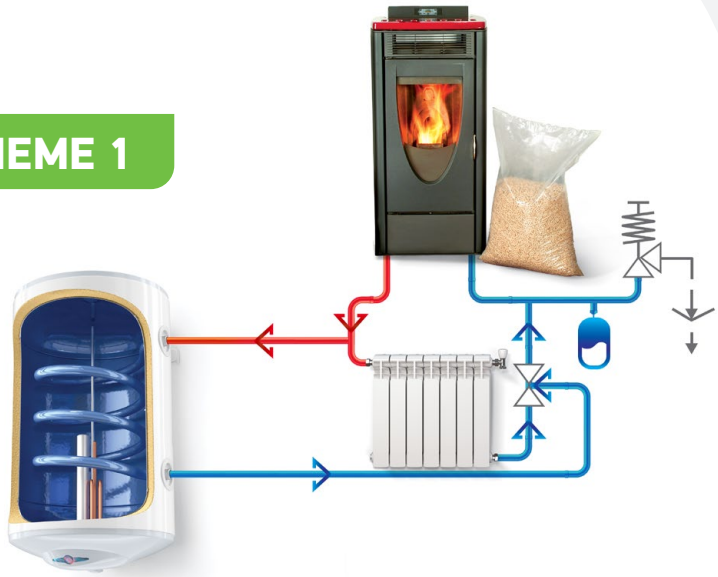

INSTALLATION SCHEME 2

Solid fuel Boiler

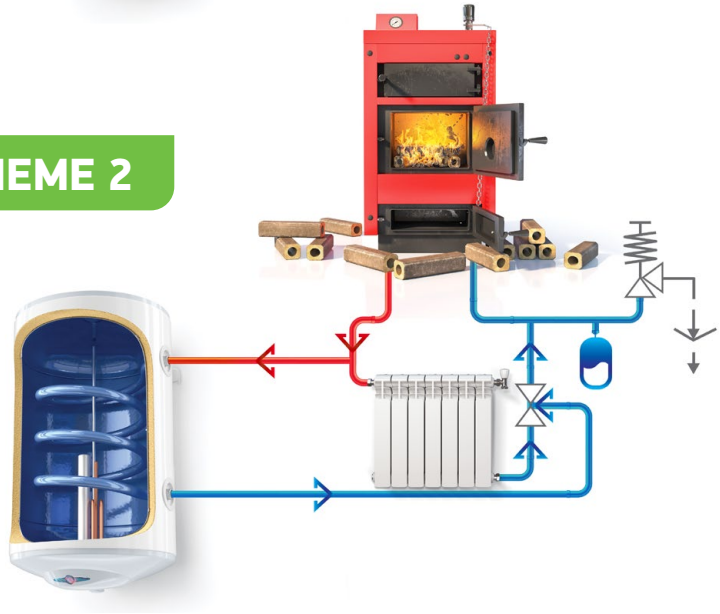

INSTALLATION SCHEME 3

Gas Boiler

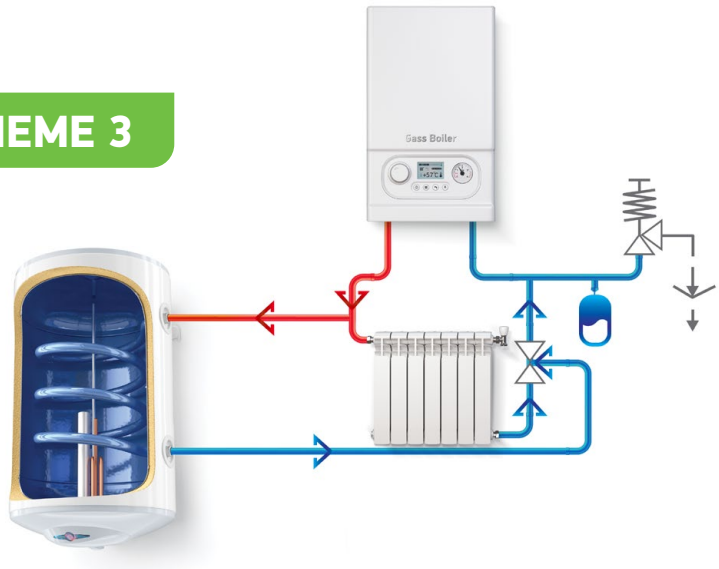

*The images are with illustrative purpose only

Water Heaters with Classic Heat Exchanger

BILIGHT WITH CLASSIC HEAT EXCHANGER

The electric water heaters of the BiLight range with inbuilt heat exchanger /serpentine/ are a product solution for utilization of alternative sources of heat energy such as:

- **Pellet boiler**
- **Gas boilers**
- **Solid fuel boilers**

BiLight

with classic Heat Exchanger

Electric water heaters with classic heat exchanger are an excellent choice for installations with high-temperature heat sources such as:



Pellet Boiler **Solid fuel Boiler** **Gas Boiler**



INNOVATIVE AND CONVENIENCE FEATURES

BILIGHT indication only when the heating element is ON

- Red light: Heating
- Blue light: Ready to use

POCKET for temperature sensor (for the models 120 L and 150 L)

Adjustable thermoregulator

ENERGY SAVING FEATURES

ECO setting of the thermoregulator

UP TO 16% LOWER THERMAL LOSSES due to NO THERMAL BRIDGE and INSUTECH technology for uniform distribution of a highly efficient insulation

SECURITY AND LONG PRODUCT LIFE FEATURES

RELIABLE ANTICORROSION PROTECTION due to **CRYSTALTECH** enamel coating of the water tank

LONGER LIFE of the water tank ensured by a magnesium anode

HIGH TEMPERATURE AND PRESSURE RESISTANCE with a stainless steel hot water pipe

DURABLE BOND between the edges of the cylinder by PLASMA WELDING

HYGIENIC CERTIFICATE

PRESSURE RELIEF VALVE to prevent excess pressure build-up

ANTI-FREEZE protection when the heating element is ON

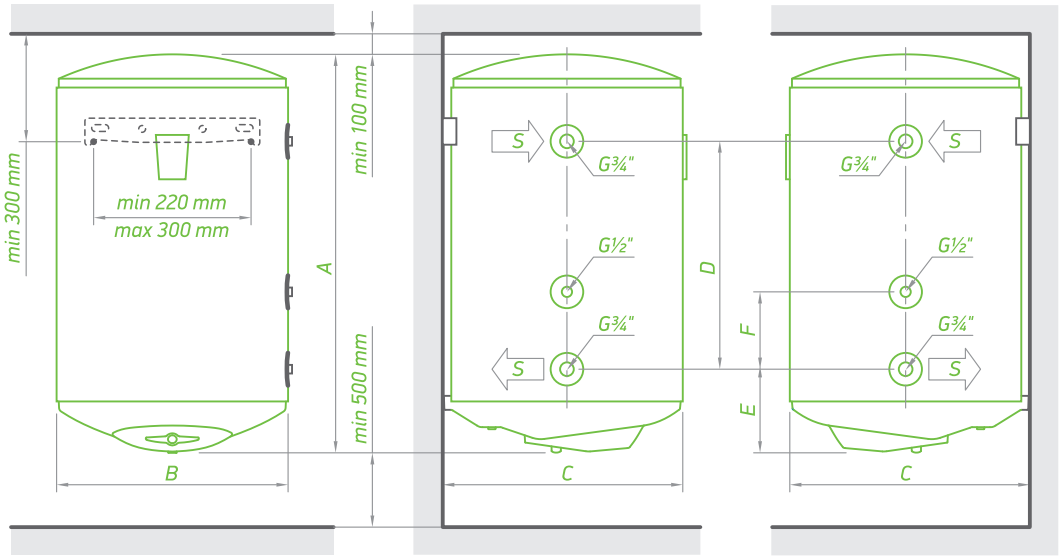

MODEL		BILIGHT 50 SE	BILIGHT 80 SE	BILIGHT 100 SE	BILIGHT 120 SE	BILIGHT 150 SE
CODE		GCVS(L) 504420 B11 TSR	GCVS(L) 804420 B11 TSR	GCVS(L) 1004420 B11 TSR	GCVS(L) 1204420 B11 TSR(C)P	GCVS(L) 1504420 B11 TSR(C)P
Real Volume	L	49	81	98	118	141
Diameter	mm	440	440	440	440	440
Rated power	W	2000	2000	2000	2000	2000
Heating time – Δ t 45 K (15 - 60° C)**80° C		0 h 33 min	0 h 54 min	0 h 45 min	0 h 55 min	1 h 12 min
Energy class		B	C	C	C	C
Heat exchanger surface	m^2	0,17	0,17	0,25	0,25	0,25
Heat exchanger capacity	L	0,9	0,9	1,2	1,2	1,2
Exchange power in continuous mode (max. coil output) *80-70° C	kW	5,2	4,7	5,8	5,8	5,8
Continuous flow rate of DHW at Δ T 35°C *80-70° C	L/h	88	71	142	142	142
Thermo pocket		–	–	–	x 1	x 1
Standing losses S	W	38	58	67	84	92
Insulation	mm	18	18	18	18	18
PRODUCT DIMENSIONS						
Height (A)	mm	574	845	985	1150	1315
Width (B)	mm	440	440	440	440	440
Depth (C)	mm	467	467	467	467	467
D	mm	150	360	480	480	480
E	mm	243	243	243	243	243
F	mm	150	150	150	150	150

*incoming-outgoing thermal transfer fluid in the heat exchanger

**incoming thermal transfer fluid in the heat exchanger

INSTALLATION SCHEME 4

Heat Pump

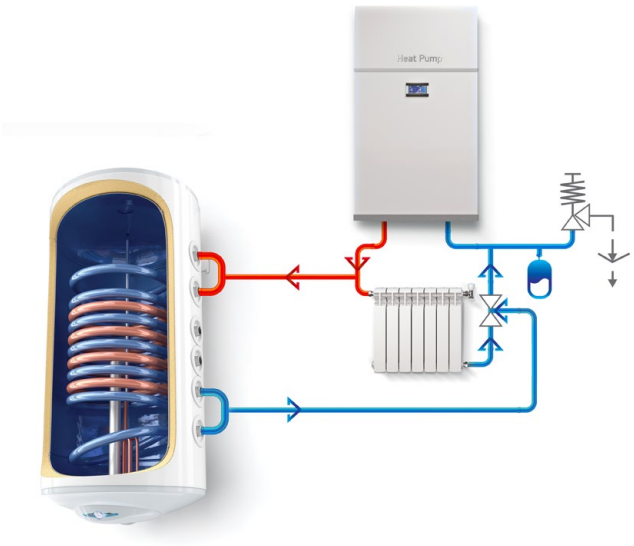

INSTALLATION SCHEME 5

Solar Panel

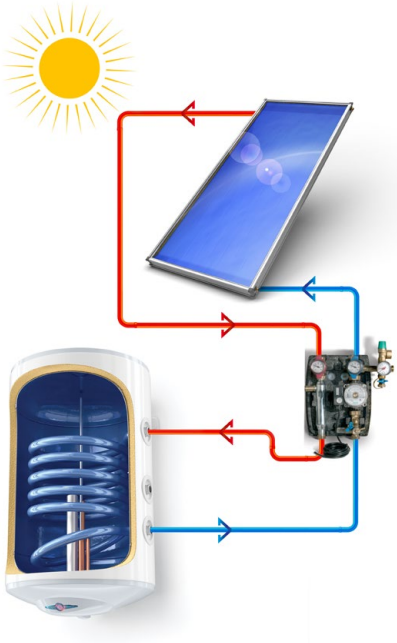

INSTALLATION SCHEME 6

2 heat sources

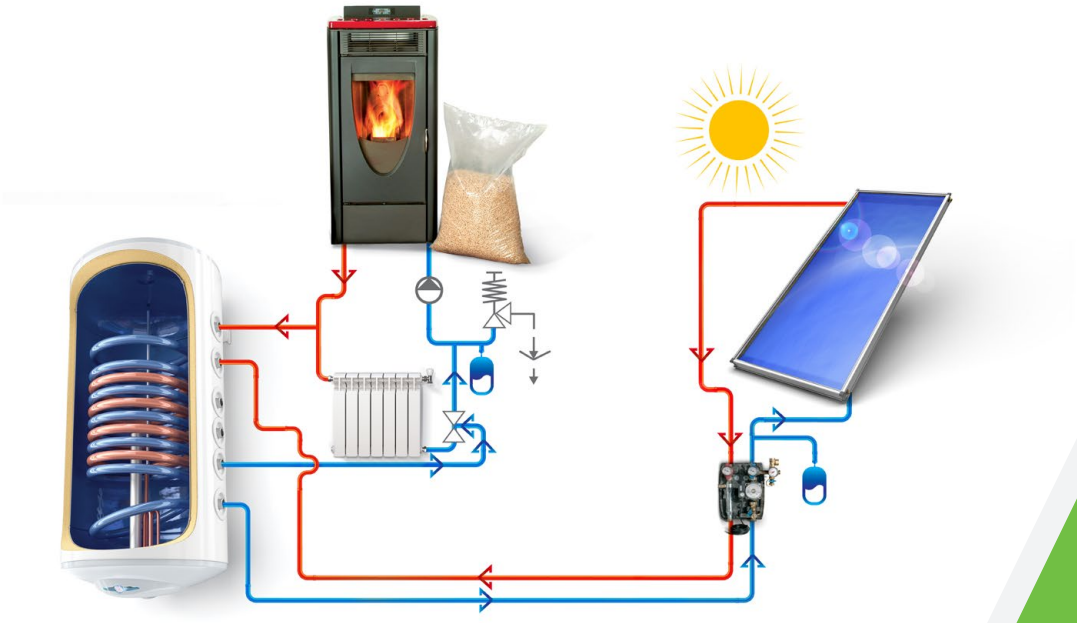

Electric water heaters with highly-efficient heat exchanger

- MODECO CERAMIC WITH HIGHLY-EFFICIENT HEAT EXCHANGER
- MODECO WITH HIGHLY-EFFICIENT HEAT EXCHANGER
- BILIGHT WITH HIGHLY-EFFICIENT HEAT EXCHANGER
- BILIGHT SLIM WITH HIGHLY-EFFICIENT HEAT EXCHANGER
- BILIGHT HORIZONTAL WITH HIGHLY-EFFICIENT HEAT EXCHANGER
- MAXEAU CERAMIC WITH HIGHLY-EFFICIENT HEAT EXCHANGER
- MODECO WITH A DOUBLE-INTEGRATED HEAT EXCHANGER
- BILIGHT WITH A DOUBLE-INTEGRATED HEAT EXCHANGER

The water heaters with a highly-efficient heat exchanger are perfect solution, not only for pellet boilers, gas boilers and solid fuel boilers, but also for:

- **Sollar systems**

ModEco Ceramic

with highly-efficient Heat Exchanger



Pellet Boiler



Solid fuel Boiler



Gas Boiler



Solar Panel



INNOVATIVE AND CONVENIENCE FEATURES

Specific design of the heat exchanger, which enhances **FULL WATER VOLUME HEATING**

BILIGHT indication only when the heating element is ON

- Red light: Heating
- Blue light: Ready to use

POCKET for temperature sensor

Adjustable thermoregulator

Increasing the efficiency of the thermal transfer via patented solution - TURBOLATOR

ENERGY SAVING FEATURES

UP TO 16% LOWER THERMAL LOSSES due to NO THERMAL BRIDGE and INSUTECH technology for uniform distribution of a highly efficient insulation

SECURITY AND LONG PRODUCT LIFE FEATURES

HIGH RELIABILITY AND SAFETY of the heating process by precise **CAPILLARY TERMOSTAT**

RELIABLE ANTICORROSION PROTECTION due to **CRYSTALTECH** enamel coating of the water tank

LONGER LIFE of the water tank ensured by a magnesium anode

HIGH TEMPERATURE AND PRESSURE RESISTANCE with a stainless steel hot water pipe

DURABLE BOND between the edges of the cylinder by PLASMA WELDING

HYGIENIC CERTIFICATE

PRESSURE RELIEF VALVE to prevent excess pressure build-up

ANTI-FREEZE protection when the heating element is ON

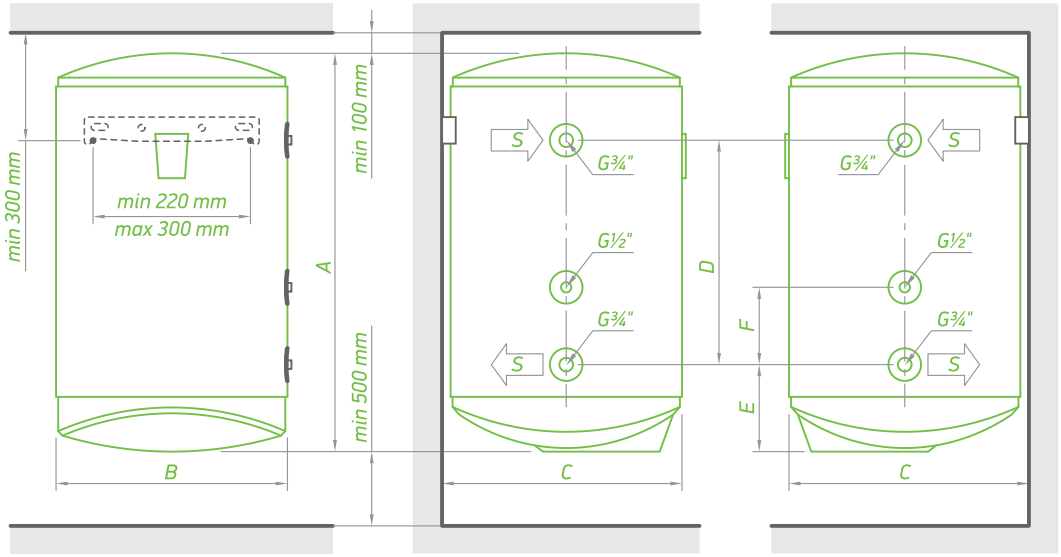

MODEL		MODECO CERAMIC 80 S	MODECO CERAMIC 100 S	MODECO CERAMIC 120 S	MODECO CERAMIC 150 S
CODE		GCV6S 804724DC21 TS2RCP	GCV9S 1004724DC21 TS2RCP	GCV9S(L) 1204724DC21 TS2RCP	GCV11S(L)O 1504724D C21 TS2RCP
Real Volume	L	79	96	116	138
Diameter	mm	470	470	470	470
Rated power	W	2400	2400	2400	2400
Heating time – Δ t 45 K (15 - 60° C)**80° C		0 h 18 min	0 h 18 min	0 h 22 min	0 h 21 min
Energy class		B	B	C	C
Heat exchanger surface	m^2	0,45	0,7	0,7	0,8
Heat exchanger capacity	L	2,1	3,2	3,2	3,9
Exchange power in continuous mode (max. coil output) at Δ T 35°C * 80 - 60° C	kW	13,8	18,5	18,5	20,9
Continuous flow rate of DHW at 35°*(80 - 60° C)	L/h	329	433	433	514
Thermo pocket		x 1	x 1	x 1	x 1
Insulation	mm	32	32	32	32
PRODUCT DIMENSIONS					
height (A)	mm	845	985	1150	1315
width (B)	mm	470	470	470	470
depth (C)	mm	496	496	496	496
D	mm	295	445	445	445
E	mm	243	243	243	243
F	mm	120	120	120	120

*incoming-outgoing thermal transfer fluid in the heat exchanger

**incoming thermal transfer fluid in the heat exchanger

TESY
It's impressive

ModEco

with highly-efficient Heat Exchanger


Pellet Boiler


Solid fuel Boiler


Gas Boiler


Solar Panel



INNOVATIVE AND CONVENIENCE FEATURES

Specific design of the heat exchanger, which enhances **FULL WATER VOLUME HEATING**

BILIGHT indication only when the heating element is ON

- Red light: Heating
- Blue light: Ready to use

POCKET for temperature sensor

Adjustable thermoregulator

Increasing the efficiency of the thermal transfer via patented solution - TURBOLATOR

ENERGY SAVING FEATURES

UP TO 16% LOWER THERMAL LOSSES due to NO THERMAL BRIDGE and INSUTECH technology for uniform distribution of a highly efficient insulation

SECURITY AND LONG PRODUCT LIFE FEATURES

HIGH RELIABILITY AND SAFETY of the heating process by precise **CAPILLARY TERMOSTAT**

RELIABLE ANTICORROSION PROTECTION due to **CRYSTALTECH** enamel coating of the water tank

LONGER LIFE of the water tank ensured by a magnesium anode

HIGH TEMPERATURE AND PRESSURE RESISTANCE with a stainless steel hot water pipe

DURABLE BOND between the edges of the cylinder by PLASMA WELDING

HYGIENIC CERTIFICATE

PRESSURE RELIEF VALVE to prevent excess pressure build-up

ANTI-FREEZE protection when the heating element is ON

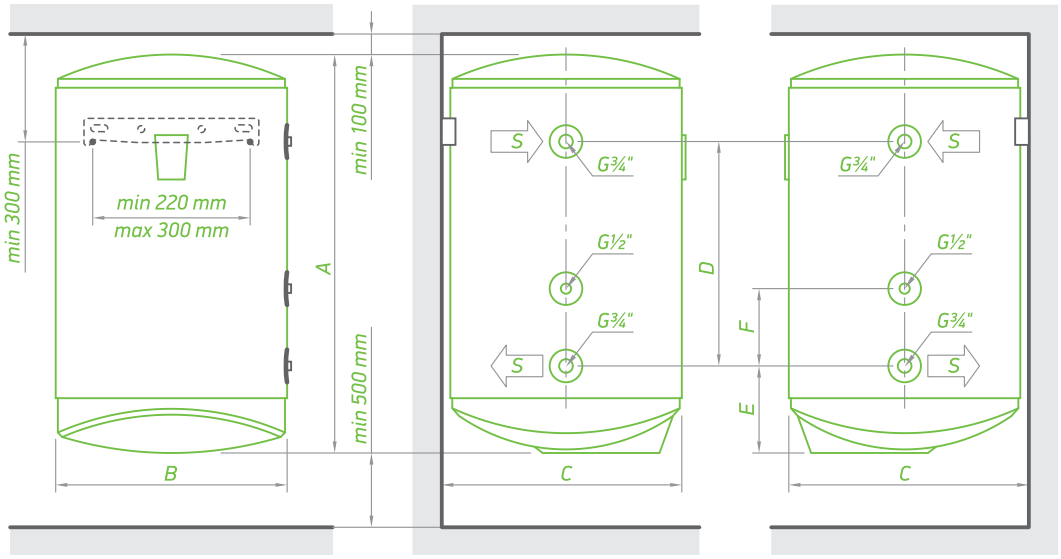

MODEL		MODECO 80 S	MODECO 100 S	MODECO 120 S	MODECO 150 S
CODE		GCV6S(L) 804720 C21 TSRCP	GCV9S(L) 1004720 C21 TSRCP	GCV9S(L) 1204720 C21 TSRCP	GCV9S(L) 1504720 C21 TSRCP
Real Volume	L	79	96	116	139
Diameter	mm	470	470	470	470
Rated power	W	2000	2000	2000	2000
Heating time – Δ t 45 K (15 - 60° C)**80° C		0 h 18 min	0 h 18 min	0 h 22 min	0 h 26 min
Energy class		C	C	C	C
Heat exchanger surface	m^2	0,45	0,7	0,7	0,8
Heat exchanger capacity	L	2,1	3,2	3,2	3,2
Exchange power in continuous mode (max. coil output) at Δ T 35°C * 80 - 60° C	kW	13,8	18,5	18,5	18,5
Continuous flow rate of DHW at 35°*(80 - 60° C)	L/h	329	433	433	433
Thermo pocket		x 1	x 1	x 1	x 1
Standing losses S	W	61	67	81	93
Insulation	mm	32	32	32	32
PRODUCT DIMENSIONS					
Height (A)	mm	574	845	1150	1315
Width (B)	mm	470	470	470	470
Depth (C)	mm	496	496	496	496
D	mm	150	360	480	480
E	mm	243	243	243	243
F	mm	150	150	150	150

*incoming-outgoing thermal transfer fluid in the heat exchanger

**incoming thermal transfer fluid in the heat exchanger

BiLight

with highly-efficient Heat Exchanger



Pellet Boiler



Solid fuel Boiler



Gas Boiler



Solar Panel



INNOVATIVE AND CONVENIENCE FEATURES

Specific design of the heat exchanger, which enhances **FULL WATER VOLUME HEATING**

BILIGHT indication only when the heating element is ON

- Red light: Heating
- Blue light: Ready to use

POCKET for temperature sensor (for the models 100 L and 150 L)

Adjustable thermoregulator

Increasing the efficiency of the thermal transfer via patented solution-TURBOLATOR

ENERGY SAVING FEATURES

ECO setting of the thermoregulator

UP TO 16% LOWER THERMAL LOSSES due to NO THERMAL BRIDGE and INSUTECH technology for uniform distribution of a highly efficient insulation

SECURITY AND LONG PRODUCT LIFE FEATURES

RELIABLE ANTICORROSION PROTECTION due to **CRYSTALTECH** enamel coating of the water tank

LONGER LIFE of the water tank ensured by a magnesium anode

HIGH TEMPERATURE AND PRESSURE RESISTANCE with a stainless steel hot water pipe

DURABLE BOND between the edges of the cylinder by PLASMA WELDING

HYGIENIC CERTIFICATE

PRESSURE RELIEF VALVE to prevent excess pressure build-up

ANTI-FREEZE protection when the heating element is ON

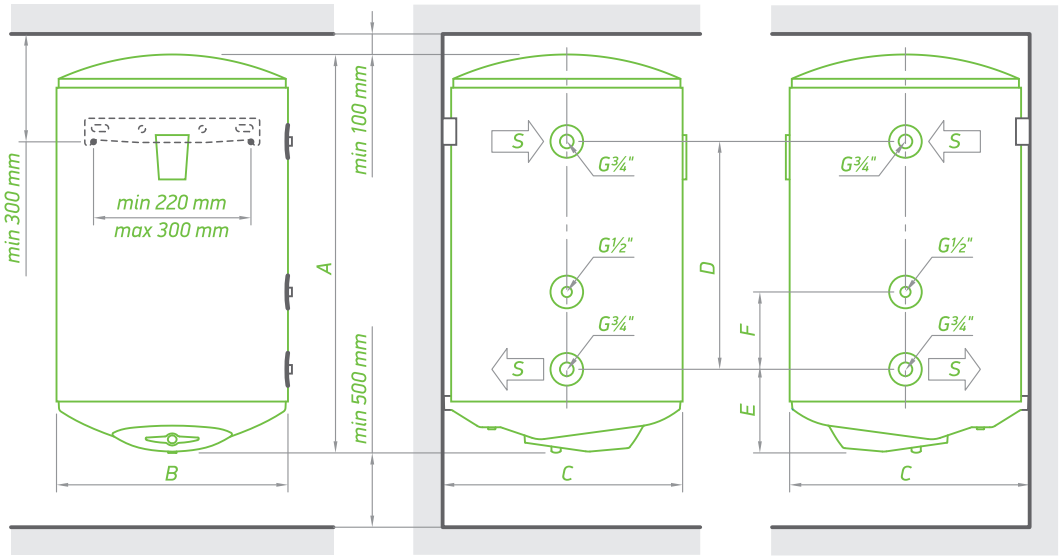

MODEL		BILIGHT 80 S	BILIGHT 100 S	BILIGHT 120 S	BILIGHT 150 S
CODE		GCV6S 804420 B11 TSR(C)	GCV9S 1004420 B11 TSRCP	GCV9S(L) 1204420 B11 TSRCP	GCV9S(L) 1504420 B11 TSRCP
Real Volume	L	79	96	116	139
Diameter	mm	440	440	440	440
Rated power	W	2000	2000	2000	2000
Heating time – Δ t 45 K (15 - 60° C)**80° C		0 h 18 min	0 h 18 min	0 h 22 min	0 h 26 min
Energy class		C	C	C	C
Heat exchanger surface	m^2	0,45	0,7	0,7	0,7
Heat exchanger capacity	L	2,1	3,2	3,2	3,2
Exchange power in continuous mode (max. coil output) at Δ T 35°C * 80 - 60° C	kW	13,8	18,5	18,5	18,5
Continuous flow rate of DHW at 35°*(80 - 60° C)	L/h	329	433	433	433
Thermo pocket		–	x 1	x 1	x 1
Standing losses S	W	61	67	81	93
Insulation	mm	18	18	18	18
PRODUCT DIMENSIONS					
Height (A)	mm	845	985	1150	1315
Width (B)	mm	440	440	440	440
Depth (C)	mm	467	467	467	467
D	mm	150	360	480	480
E	mm	243	243	243	243
F	mm	150	150	150	150

*incoming-outgoing thermal transfer fluid in the heat exchanger

**incoming thermal transfer fluid in the heat exchanger

BiLight Slim

with highly-efficient Heat Exchanger



Pellet Boiler



Solid fuel Boiler



Gas Boiler



Solar Panel



INNOVATIVE AND CONVENIENCE FEATURES

BILIGHT indication only when the heating element is ON

- Red light: Heating
- Blue light: Ready to use

POCKET for temperature sensor

Adjustable thermoregulator

Specific design of the heat exchanger, which enhances FULL WATER VOLUME HEATING

Increasing the efficiency of the thermal transfer via patented solution- TURBOLATOR

ENERGY SAVING FEATURES

ECO setting of the thermoregulator

UP TO 16% LOWER THERMAL LOSSES due to NO THERMAL BRIDGE and INSUTECH technology for uniform distribution of a highly efficient insulation

SECURITY AND LONG PRODUCT LIFE FEATURES

RELIABLE ANTICORROSION PROTECTION due to **CRYSTALTECH** enamel coating of the water tank

LONGER LIFE of the water tank ensured by a magnesium anode

HIGH TEMPERATURE AND PRESSURE RESISTANCE with a stainless steel hot water pipe

DURABLE BOND between the edges of the cylinder by PLASMA WELDING

HYGIENIC CERTIFICATE

PRESSURE RELIEF VALVE to prevent excess pressure build-up

ANTI-FREEZE protection when the heating element is ON

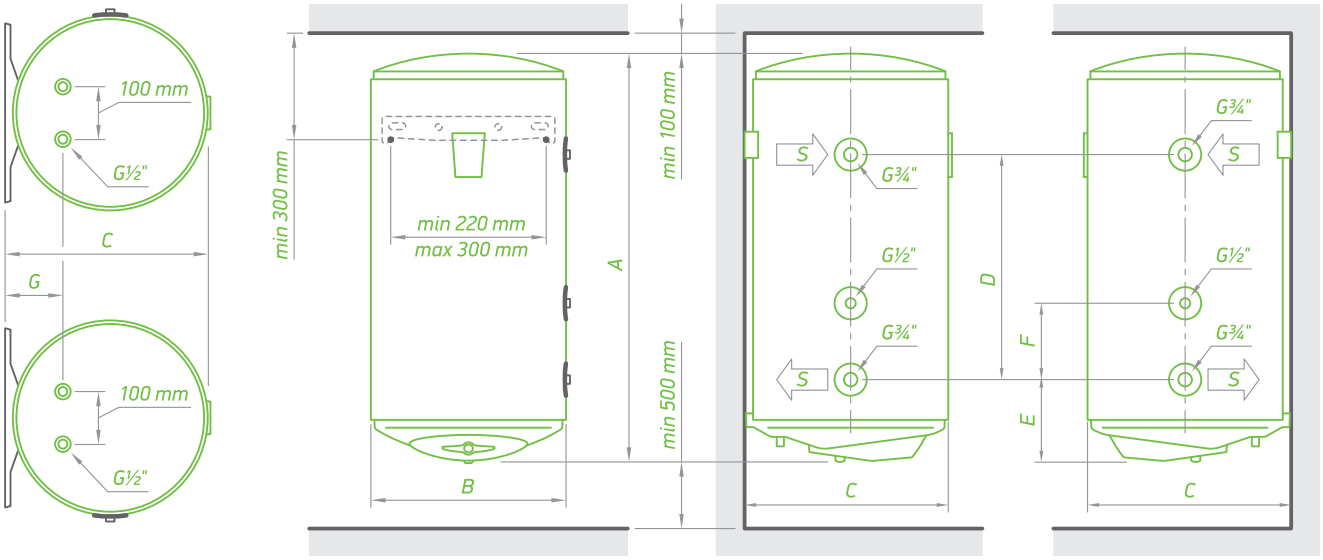

MODEL		BILIGHT SLIM 80 S
CODE		GCVS(L) 803830 B12 TSRP
Real Volume	L	77
Diameter	mm	386
Rated power	W	3000
Heating time – Δ t 45 K (15 - 60° C)**80° C		0 h 20 min
Energy class		B
Heat exchanger surface	m^2	0,42
Heat exchanger capacity	L	2
Exchange power in continuous mode (max. coil output) at Δ T 35°C * 80 - 60° C	kW	11,5
Continuous flow rate of DHW at 35°*(80 - 60° C)	L/h	265
Thermo pocket		x 1
Standing losses S	W	43
Insulation	mm	34
PRODUCT DIMENSIONS		
Height (A)	mm	1214
Width (B)	mm	386
Depth (C)	mm	412
D	mm	395
E	mm	218
F	mm	150

*incoming-outgoing thermal transfer fluid in the heat exchanger

**incoming thermal transfer fluid in the heat exchanger

BiLight Horizontal

with highly-efficient Heat Exchanger

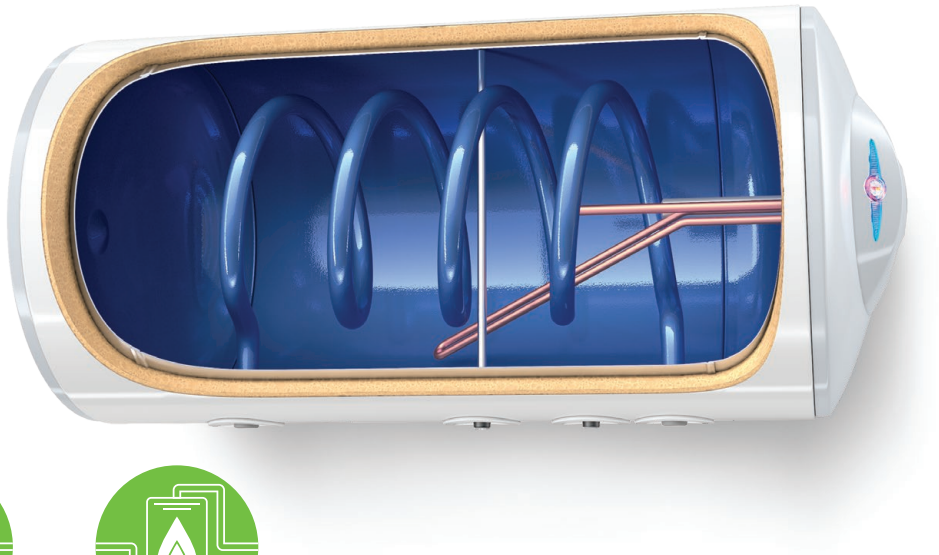

Solar Panel

Pellet Boiler

Solid fuel Boiler

Gas Boiler

INNOVATIVE AND CONVENIENCE FEATURES

BILIGHT indication only when the heating element is ON

- Red light: Heating
- Blue light: Ready to use

Adjustable thermoregulator

ENERGY SAVING FEATURES

UP TO 16% LOWER THERMAL LOSSES due to NO THERMAL BRIDGE and INSUTECH technology for uniform distribution of a highly efficient insulation

ECO setting of the thermoregulator

SECURITY AND LONG PRODUCT LIFE FEATURES

RELIABLE ANTICORROSION PROTECTION due to **CRYSTALTECH** enamel coating of the water tank

LONGER LIFE of the water tank ensured by a magnesium anode

HIGH TEMPERATURE AND PRESSURE RESISTANCE with a stainless steel hot water pipe

DURABLE BOND between the edges of the cylinder by PLASMA WELDING

HYGIENIC CERTIFICATE

PRESSURE RELIEF VALVE to prevent excess pressure build-up

ANTI-FREEZE protection when the heating element is ON

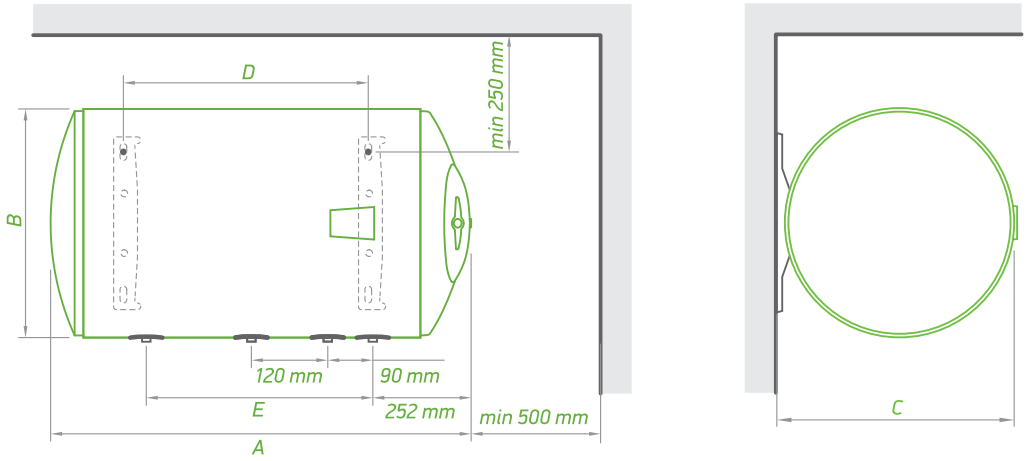

MODEL		BILIGHT 80 HS	BILIGHT 100 HS	BILIGHT 120 HS
CODE		GCHS 804420 B12 TSRC	GCHS 1004420 B12 TSRC	GCHS 1204420 B12 TSRC
Real Volume	L	81	98	118
Diameter	mm	440	440	440
Rated power	W	2000	2000	2000
Heating time – Δ t 45 K (15 - 60° C)**80° C		0 h 54 min	0 h 45 min	0 h 48 min
Energy class		C	C	C
Heat exchanger surface	m^2	0,21	0,28	0,28
Heat exchanger capacity	L	0,9	1,2	1,2
Exchange power in continuous mode (max. coil output) at Δ T 35°C *80 - 60° C	kW	2,9	5,7	5,7
Continuous flow rate of DHW at 35° *(80 - 60° C)	L/h	70	139	139
Standing losses S	W	63	74	90
Insulation	mm	18	18	18
PRODUCT DIMENSIONS				
Height (A)	mm	855	995	1160
Width (B)	mm	440	440	440
Depth (C)	mm	467	467	467
D	mm	407	552	702
E	mm	360	480	480
F	mm	150	150	150

*incoming-outgoing thermal transfer fluid in the heat exchanger

**incoming thermal transfer fluid in the heat exchanger

TESY
It's impressive

MaxEau Ceramic

with highly-efficient Heat Exchanger


Pellet Boiler


Solid fuel Boiler


Gas Boiler


Solar Panel



INNOVATIVE AND CONVENIENCE FEATURES

EASY MAINTENANCE without preliminary draining of the water tank

Specific design of the heat exchanger, which enhances **FULL WATER VOLUME HEATING**

POCKET for temperature sensor

Adjustable thermoregulator

Increasing the efficiency of the thermal transfer via patented solution - TURBOLATOR

ENERGY SAVING FEATURES

ECO setting of the thermoregulator

UP TO 16% LOWER THERMAL LOSSES due to NO THERMAL BRIDGE and INSUTECH technology for uniform distribution of a highly efficient insulation

SECURITY AND LONG PRODUCT LIFE FEATURES

HIGH RELIABILITY AND SAFETY of the heating process by precise **CAPILLARY TERMOSTAT**

RELIABLE ANTICORROSION PROTECTION due to **CRYSTALTECH** enamel coating of the water tank

LONGER LIFE of the water tank ensured by a magnesium anode

HIGH TEMPERATURE AND PRESSURE RESISTANCE with a stainless steel hot water pipe

DURABLE BOND between the edges of the cylinder by PLASMA WELDING

HYGIENIC CERTIFICATE

PRESSURE RELIEF VALVE to prevent excess pressure build-up

ANTI-FREEZE protection when the heating element is ON

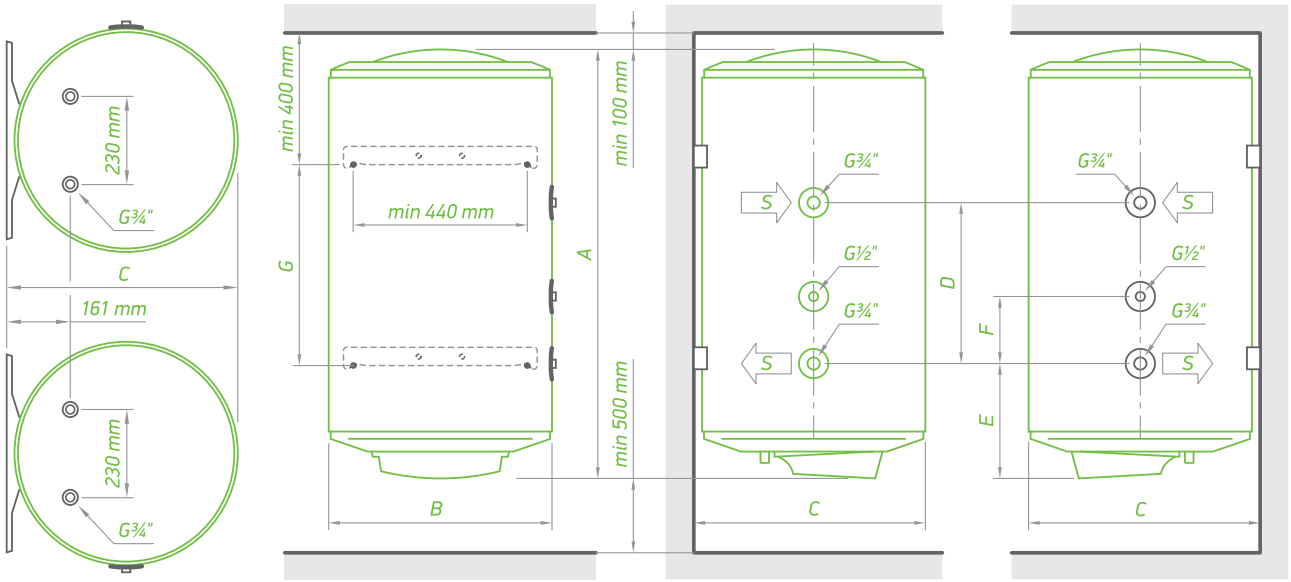

MODEL		MAXEAU CERAMIC 200 S2
CODE		GCV10S(L) 2005624C D06 S2RP
Real Volume	L	196
Diameter	mm	560
Rated power	W	12400 / 2400
Heating time – Δ t 45 K (15 - 60° C)**80° C		0 h 42 min
Energy class		B
Heat exchanger surface	m^2	0,76
Heat exchanger capacity	L	5
Exchange power in continuous mode (max. coil output) at Δ T 35°C *80 - 60° C	kW	22,6
Continuous flow rate of DHW at 35° *(80 - 60° C)	L/h	561
Thermo pocket		x 1
Standing losses S	W	61
Insulation	mm	40
PRODUCT DIMENSIONS		
Height (A)	mm	1357
Width (B)	mm	560
Depth (C)	mm	567
D	mm	800
E	mm	296
F	mm	150
G	mm	800

*incoming-outgoing thermal transfer fluid in the heat exchanger

**incoming thermal transfer fluid in the heat exchanger

ModEco

with a double-integrated Heat Exchanger



Pellet Boiler



Solid fuel Boiler



Gas Boiler



Solar Panel

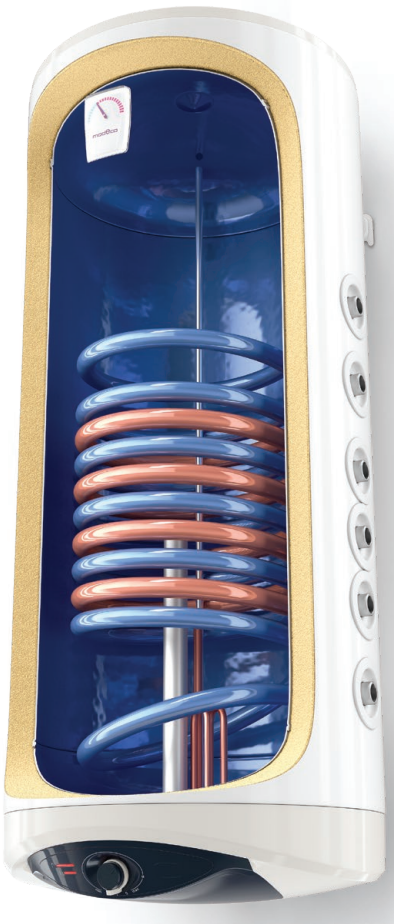

INNOVATIVE AND CONVENIENCE FEATURES

For systems with up to **2 HEAT SOURCES**

Option for parallel connection of the **TWO HEAT EXCHANGERS TO ONE ALTERNATIVE ENERGY SOURCE** (heat pump or condensing gas boiler)

Specific design of the heat exchanger, which enhances **FULL WATER VOLUME HEATING**

BILIGHT indication only when the heating element is ON

- Red light: Heating
- Blue light: Ready to use

2 POCKETS for temperature sensor

Adjustable thermoregulator

Increasing the efficiency of the thermal transfer via patented solution-TURBOLATOR

ENERGY SAVING FEATURES

UP TO 16% LOWER THERMAL LOSSES due to NO THERMAL BRIDGE and INSUTECH technology for uniform distribution of a highly efficient insulation

ECO setting of the thermoregulator

SECURITY AND LONG PRODUCT LIFE FEATURES

HIGH RELIABILITY AND SAFETY of the heating process by precise **CAPILLARY TERMOSTAT**

RELIABLE ANTICORROSION PROTECTION due to **CRYSTALTECH** enamel coating of the water tank

LONGER LIFE of the water tank ensured by a magnesium anode

HIGH TEMPERATURE AND PRESSURE RESISTANCE with a stainless steel hot water pipe

DURABLE BOND between the edges of the cylinder by PLASMA WELDING

HYGIENIC CERTIFICATE

PRESSURE RELIEF VALVE to prevent excess pressure build-up

ANTI-FREEZE protection when the heating element is ON

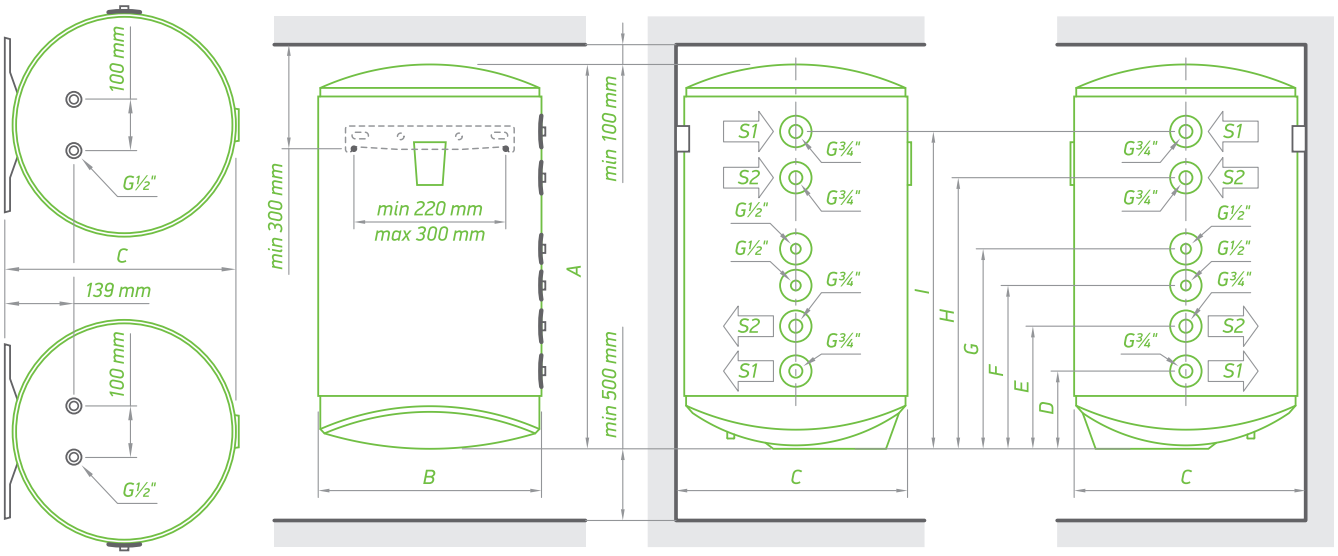

MODEL		MODECO 120 S2	MODECO 150 S2
CODE		GCV7/4S 1204720 C21 TSRCP2	GCV7/4S 1504720 C21 TSRCP2
Real Volume	L	115	137
Diameter	mm	470	470
Rated power	W	2000	2000
Heating time – Δ t 45 K (15 - 60° C)**80° C		0 h 38 min / 0 h 54 min	0 h 42 min / 0 h 54 min
Energy class		C	C
Heat exchanger surface	m^2	0,5 / 0,3	0,5 / 0,3
Heat exchanger capacity	L	2,4 / 1,4	2,4 / 1,4
Exchange power in continuous mode (max. coil output) at Δ T 35°C * 80 - 60° C	kW	13,4 / 8,1	13,4 / 8,1
Continuous flow rate of DHW at 35°*(80 - 60° C)	L/h	330 / 201	330 / 201
Thermo pocket		x 2	x 2
Insulation	mm	32	32
PRODUCT DIMENSIONS			
height (A)	mm	1150	1315
width (B)	mm	470	470
depth (C)	mm	496	496
D	mm	243	243
E	mm	341	341
F	mm	431	431
G	mm	521	521
H	mm	645	645
I	mm	743	743

*incoming-outgoing thermal transfer fluid in the heat exchanger

**incoming thermal transfer fluid in the heat exchanger

BiLight

with a double-integrated Heat Exchanger

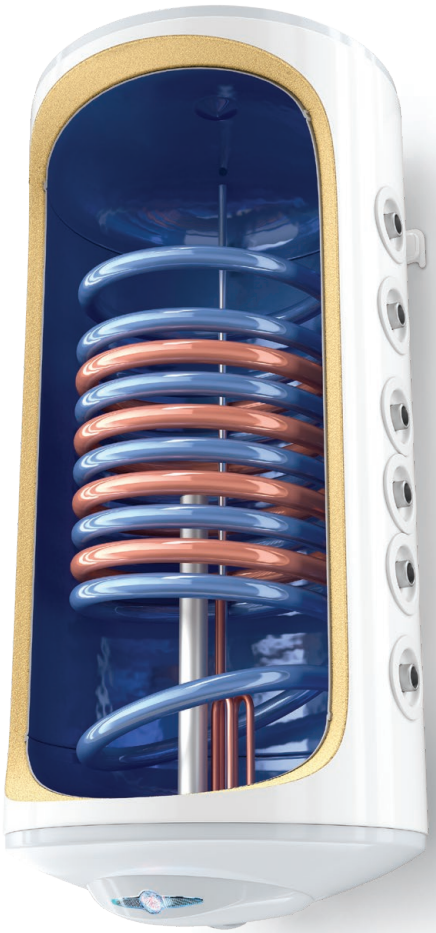



Pellet Boiler



Solid fuel Boiler



Gas Boiler



Solar Panel

INNOVATIVE AND CONVENIENCE FEATURES

For systems with up to **2 HEAT SOURCES**

Option for parallel connection of the **TWO HEAT EXCHANGERS TO ONE ALTERNATIVE ENERGY SOURCE** (heat pump or condensing gas boiler)

Specific design of the heat exchanger, which enhances **FULL WATER VOLUME HEATING**

BILIGHT indication only when the heating element is ON

- Red light: Heating
- Blue light: Ready to use

2 POCKETS for temperature sensor

Adjustable thermoregulator

Increasing the efficiency of the thermal transfer via patented solution-TURBOLATOR

ENERGY SAVING FEATURES

UP TO 16% LOWER THERMAL LOSSES due to NO THERMAL BRIDGE and INSUTECH technology for uniform distribution of a highly efficient insulation

ECO setting of the thermoregulator

SECURITY AND LONG PRODUCT LIFE FEATURES

RELIABLE ANTICORROSION PROTECTION due to **CRYSTALTECH** enamel coating of the water tank

LONGER LIFE of the water tank ensured by a magnesium anode

HIGH TEMPERATURE AND PRESSURE RESISTANCE with a stainless steel hot water pipe

DURABLE BOND between the edges of the cylinder by PLASMA WELDING

HYGIENIC CERTIFICATE

PRESSURE RELIEF VALVE to prevent excess pressure build-up

ANTI-FREEZE protection when the heating element is ON

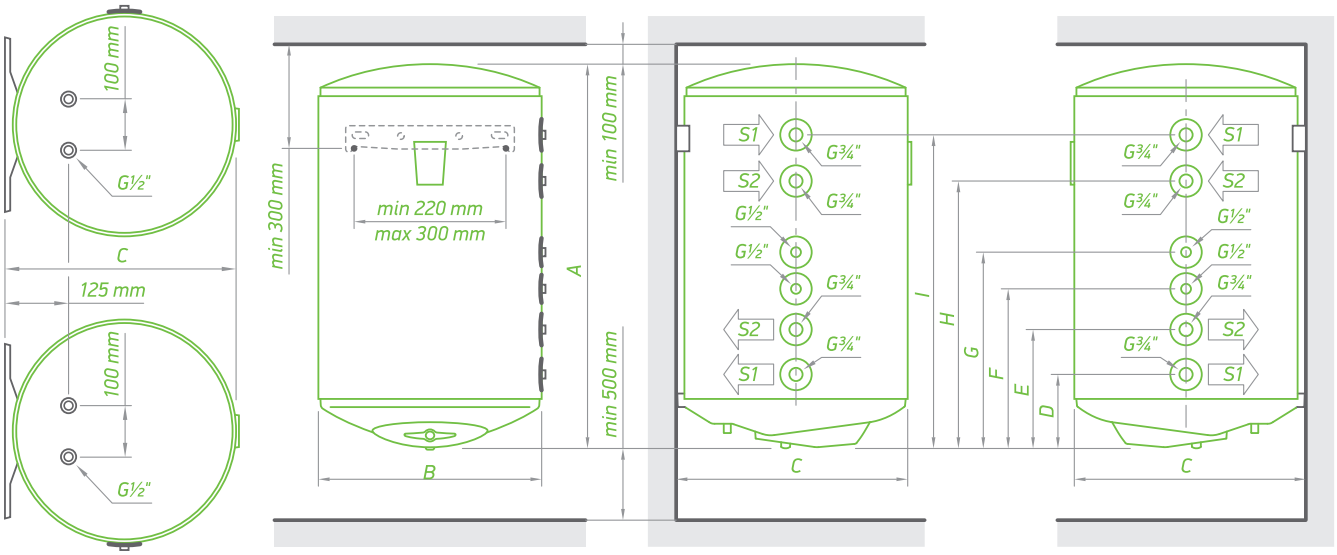

MODEL		BILIGHT 120 S2	BILIGHT 150 S2
CODE		GCV7/4S 1204420 B11 TSRCP2	GCV7/4S 1504420 B11 TSRCP2
Real Volume	L	115	138
Diameter	mm	440	440
Rated power	W	2000	2000
Heating time – Δ t 45 K (15 - 60° C)**80° C		0 h 38 min / 0 h 54 min	0 h 42 min / 0 h 54 min
Energy class		C	C
Heat exchanger surface	m^2	0.5 / 0.3	0.5 / 0.3
Heat exchanger capacity	L	2.4 / 1.4	2.4 / 1.4
Exchange power in continuous mode (max. coil output) at Δ T 35°C *80 - 60° C	kW	13.4 / 8.1	13.4 / 8.1
Continuous flow rate of DHW at 35° *(80 - 60° C)	L/h	330 / 201	330 / 201
Thermo pocket		x 2	x 2
Standing losses S	W	74	90
Insulation	mm	18	18
PRODUCT DIMENSIONS			
Height (A)	mm	1160	1325
Width (B)	mm	440	440
Depth (C)	mm	467	467
D	mm	239	239
E	mm	337	337
F	mm	427	427
G	mm	518	518
H	mm	642	642
I	mm	740	740

*incoming-outgoing thermal transfer fluid in the heat exchanger

**incoming thermal transfer fluid in the heat exchanger



TESY

COMPACT
WATER HEATERS


TESY



Compact

WHEN SPACE IS LIMITED

- **30L** ABOVE SINK
- **30L** UNDER SINK
- **10/15L** ABOVE SINK
- **10/15L** UNDER SINK
- **7L** ABOVE SINK
- **7L** UNDER SINK
- **5L** UNDER SINK

		 Compact 30l above sink	 Compact 30l under sink	 Compact 10/15l above sink	 Compact 10/15l under sink
Innovative and convenience features	Space saving	✓	✓	✓	✓
	Convenient push-push termoregulator			✓	✓
	Adjustable termoregulator	✓	✓		
	Copper heating element	✓	✓	✓	✓
	Easy installation		✓		✓
	Floor-standing model		✓		✓
	BiLight indication			✓	✓
	Light indication	✓	✓		
Energy-saving features	Polyurethane insulation	✓	✓	✓	✓
Security and long-life features	Reliable corrosion protection	✓	✓	✓	✓
	Magnesium anode protector	✓	✓	✓	✓
	Hygienic certificate	✓	✓	✓	✓
	Pressure relief valve	✓	✓	✓	✓
	Anti-freeze protection	✓	✓	✓	✓

		 Compact 7l above sink	 Compact 7l under sink	 Compact 5l under sink
Innovative and convenience features	Space saving	✓	✓	✓
	Convenient push-push termoregulator			
	Adjustable termoregulator	✓	✓	✓
	Copper heating element	✓	✓	✓
	Easy installation		✓	✓
	Floor-standing model		✓	✓
	BiLight indication			
	Light indication	✓	✓	✓
Energy-saving features	Polyurethane insulation	✓	✓	✓
Security and long-life features	Reliable corrosion protection	✓	✓	✓
	Magnesium anode protector	✓	✓	✓
	Hygienic certificate	✓	✓	✓
	Pressure relief valve	✓	✓	✓
	Anti-freeze protection	✓	✓	✓

Compact 30

above sink installation

LONG LIFE, EASY TO INSTALL



INNOVATIVE AND CONVENIENCE FEATURES

SAVES SPACE due to compact size

ENERGY SAVING FEATURES

POLYURETHANE INSULATION

SECURITY AND LONG PRODUCT LIFE FEATURES

RELIABLE ANTICORROSION PROTECTION due to **CRYSTALTECH** enamel coating of the water tank

LONGER LIFE of the water tank ensured by a magnesium anode

PRESSURE RELIEF VALVE to prevent excess pressure build-up

HYGIENIC CERTIFICATE

ANTI-FREEZE protection

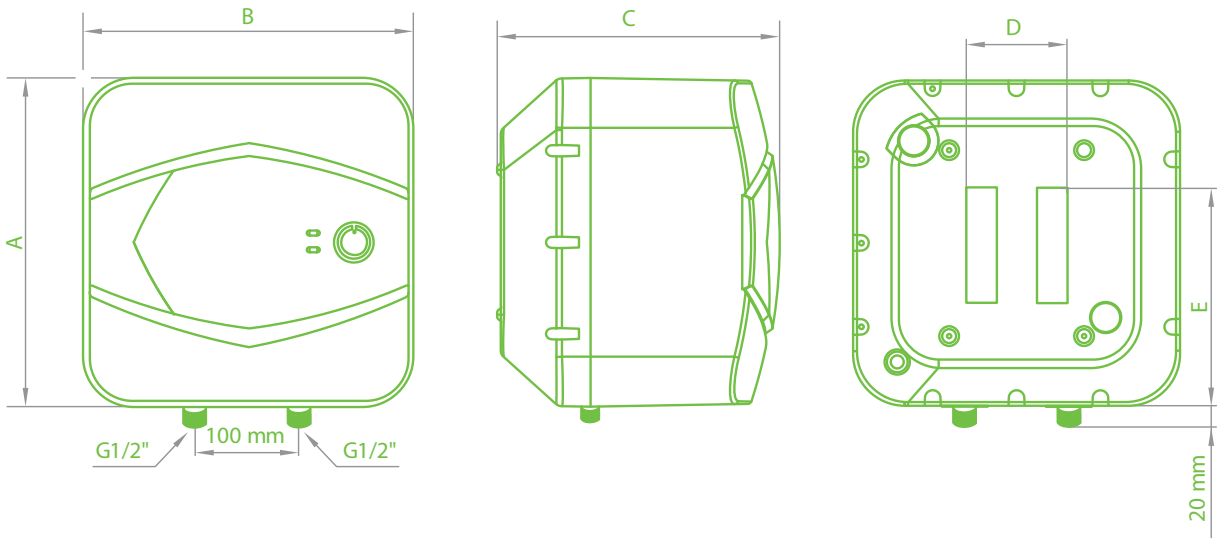

MODEL		COMPACT 30 A
CODE		GCA 3015 G01 RC
Real Volume	L	27
Rated power	W	1500
Heating time –Δ t 45 K (15 - 60° C)		0 h 56 min
Annual consumption of electricity AEC	kWh	549
Energy class		C
Load profile		S
*T out of box	°C	65
**V 40	L	45
***T max	°C	65
****Max 40	L	45
PRODUCT DIMENSIONS		
height (A)	mm	445
width (B)	mm	445
depth (C)	mm	383
D	mm	87
E	mm	298

*T out of box – the optimal working temperature for the specific electric water heater model, set by the producer
**V 40 – the quantity of hot water, which the electric water heater can produce, while working at T out of box
***T max – the maximal working temperature of the electric water heater
****Max 40 – the maximal quantity of hot water, which the electric water heater can produce, while working at maximum temperature

Compact 30

under sink installation

EASY TO INSTALL, FLOOR STANDING



INNOVATIVE AND CONVENIENCE FEATURES

SAVES SPACE due to compact size

EASY INSTALLATION only through 2 flexible connectors

USE IT ONLY WHEN NECESSARY, because it does not need to be attached to the wall

ENERGY SAVING FEATURES

POLYURETHANE INSULATION

SECURITY AND LONG PRODUCT LIFE FEATURES

RELIABLE ANTICORROSION PROTECTION due to **CRYSTALTECH** enamel coating of the water tank

LONGER LIFE of the water tank ensured by a magnesium anode

PRESSURE RELIEF VALVE to prevent excess pressure build-up

HYGIENIC CERTIFICATE

ANTI-FREEZE protection

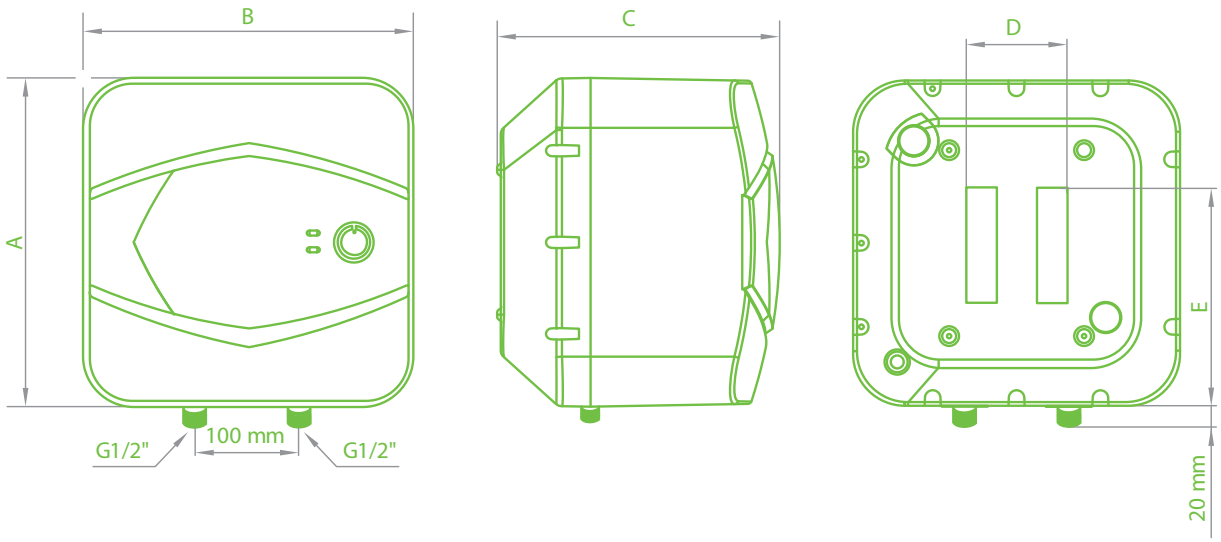

MODEL		COMPACT 30 U
CODE		GCU 3015 G01 RC
Real Volume	L	27
Rated power	W	1500
Heating time –Δ t 45 K (15 - 60° C)		0 h 56 min
Annual consumption of electricity AEC	kWh	559
Energy class		C
Load profile		S
*T out of box	°C	65
**V 40	L	44
***T max	°C	65
****Max 40	L	44
PRODUCT DIMENSIONS		
height (A)	mm	445
width (B)	mm	445
depth (C)	mm	383
D	mm	87
E	mm	298

*T out of box – the optimal working temperature for the specific electric water heater model, set by the producer
**V 40 – the quantity of hot water, which the electric water heater can produce, while working at T out of box
***T max – the maximal working temperature of the electric water heater
****Max 40 – the maximal quantity of hot water, which the electric water heater can produce, while working at maximum temperature

Compact 10/15

above sink installation

CLASS A BILIGHT FUNCTION



INNOVATIVE AND CONVENIENCE FEATURES

SAVES SPACE due to compact size

BILIGHT indication

- Red light: Heating
- Blue light: Ready to use

SMOOTH WATER TEMPERATURE SETTING by convenient push-push thermoregulator

ENERGY SAVING FEATURES

Delivering the **HIGHEST ENERGY CLASS A**

POLYURETHANE INSULATION

SECURITY AND LONG PRODUCT LIFE FEATURES

RELIABLE ANTICORROSION PROTECTION due to **CRYSTALTECH** enamel coating of the water tank

LONGER LIFE of the water tank ensured by a magnesium anode

PRESSURE RELIEF VALVE to prevent excess pressure build-up

HYGIENIC CERTIFICATE

ANTI-FREEZE protection

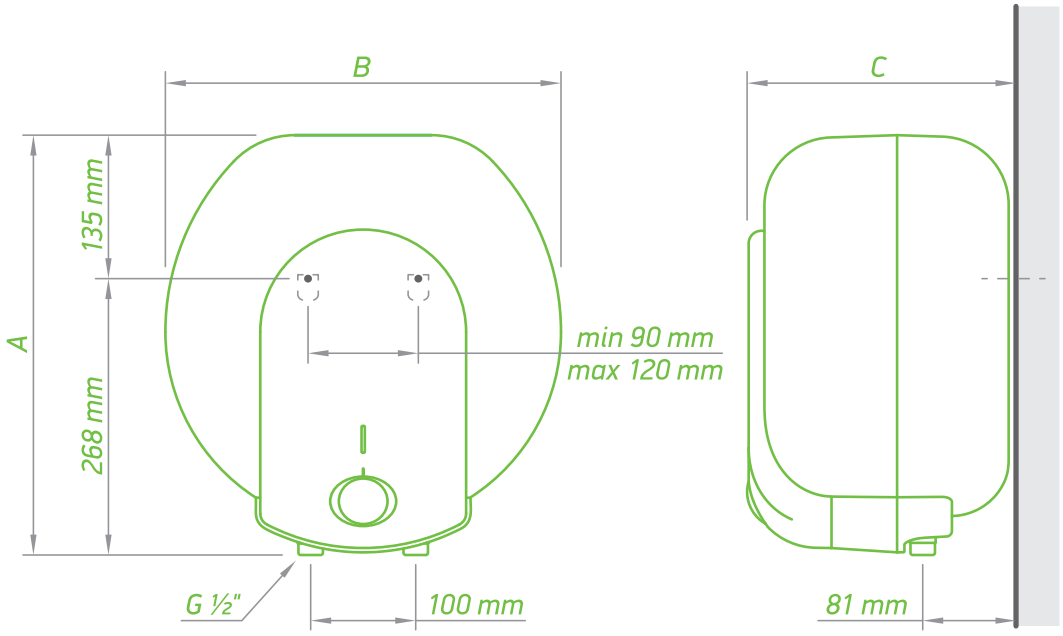

MODEL		COMPACT 10 A	COMPACT 15 A
CODE		GCA 1015 L52 RC	GCA 1515 L52 RC
Real Volume	L	10	15
Rated power	W	1500	1500
Heating time –Δ t 45 K (15 - 60° C)		0 h 20 min	0 h 31 min
Annual consumption of electricity AEC	kWh	525	534
Energy class		A	B
Load profile		XXS	XXS
*T out of box	°C	60	60
**V 40	L	16	25
***T max	°C	70	70
****Max 40	L	18	27
PRODUCT DIMENSIONS			
height (A)	mm	399	399
width (B)	mm	377	377
depth (C)	mm	247	304

*T out of box – the optimal working temperature for the specific electric water heater model, set by the producer
**V 40 – the quantity of hot water, which the electric water heater can produce, while working at T out of box
***T max – the maximal working temperature of the electric water heater
****Max 40 – the maximal quantity of hot water, which the electric water heater can produce, while working at maximum temperature

Compact 10/15

under sink installation

BILIGHT FUNCTION, FLOOR STANDING



INNOVATIVE AND CONVENIENCE FEATURES

SAVES SPACE due to compact size

EASY INSTALLATION only through 2 flexible connectors

BILIGHT indication

- Red light: Heating
- Blue light: Ready to use

SMOOTH WATER TEMPERATURE SETTING by convenient push-push thermoregulator

ENERGY SAVING FEATURES

POLYURETHANE INSULATION

SECURITY AND LONG PRODUCT LIFE FEATURES

RELIABLE ANTICORROSION PROTECTION due to **CRYSTALTECH** enamel coating of the water tank

LONGER LIFE of the water tank ensured by a magnesium anode

PRESSURE RELIEF VALVE to prevent excess pressure build-up

HYGIENIC CERTIFICATE

ANTI-FREEZE protection

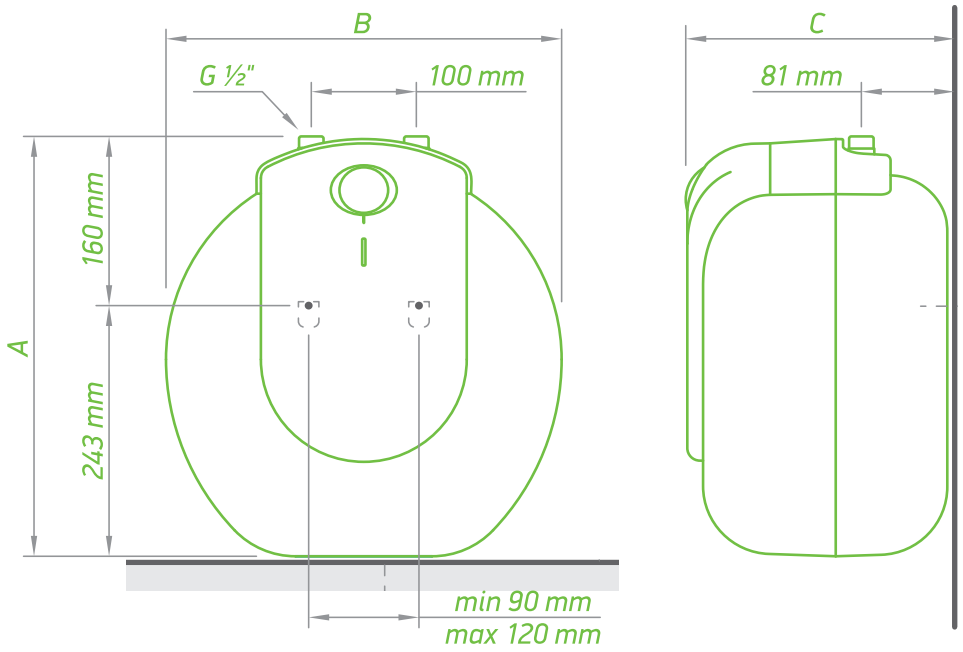

MODEL		COMPACT 10 U	COMPACT 15 U
CODE		GCU 1015 L52 RC	GCU 1515 L52 RC
Real Volume	L	10	15
Rated power	W	1500	1500
Heating time –Δ t 45 K (15 - 60° C)		0 h 20 min	0 h 31 min
Annual consumption of electricity AEC	kWh	573	571
Energy class		B	B
Load profile		XXS	XXS
*T out of box	°C	60	60
**V 40	L	15	22
***T max	°C	70	70
****Max 40	L	16	27
PRODUCT DIMENSIONS			
height (A)	mm	399	399
width (B)	mm	377	377
depth (C)	mm	247	304

*T out of box – the optimal working temperature for the specific electric water heater model, set by the producer
**V 40 – the quantity of hot water, which the electric water heater can produce, while working at T out of box
***T max – the maximal working temperature of the electric water heater
****Max 40 – the maximal quantity of hot water, which the electric water heater can produce, while working at maximum temperature

Compact 7

above sink installation

CLASS A, SAVES SPACE



INNOVATIVE AND CONVENIENCE FEATURES

SAVES SPACE due to compact size

ENERGY SAVING FEATURES

Delivering the **HIGHEST ENERGY CLASS A**

POLYURETHANE INSULATION

SECURITY AND LONG PRODUCT LIFE FEATURES

RELIABLE ANTICORROSION PROTECTION due to **CRYSTALTECH** enamel coating of the water tank

LONGER LIFE of the water tank ensured by a magnesium anode

PRESSURE RELIEF VALVE to prevent excess pressure build-up

HYGIENIC CERTIFICATE

ANTI-FREEZE protection

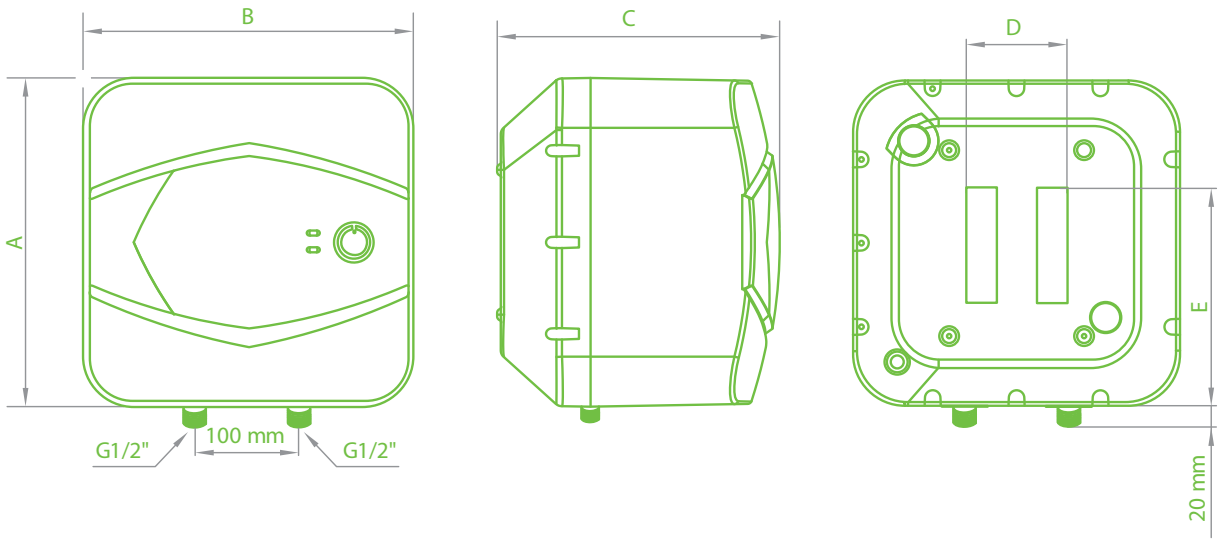

MODEL		COMPACT 7 A
CODE		GCA 0715 G01 RC
Real Volume	L	6.5
Rated power	W	1500
Heating time –Δ t 45 K (15 - 60° C)		0 h 14 min
Annual consumption of electricity AEC	kWh	525
Energy class		A
Load profile		XXS
*T out of box	°C	65
**V 40	L	12
***T max	°C	65
****Max 40	L	12
PRODUCT DIMENSIONS		
height (A)	mm	315
width (B)	mm	315
depth (C)	mm	278
D	mm	97
E	mm	211

*T out of box – the optimal working temperature for the specific electric water heater model, set by the producer
**V 40 – the quantity of hot water, which the electric water heater can produce, while working at T out of box
***T max – the maximal working temperature of the electric water heater
****Max 40 – the maximal quantity of hot water, which the electric water heater can produce, while working at maximum temperature

Compact 7

under sink installation

FLOOR STANDING



INNOVATIVE AND CONVENIENCE FEATURES

SAVES SPACE due to compact size

EASY INSTALLATION only through 2 flexible connectors

USE IT ONLY WHEN NECESSARY, because it does not need to be attached to the wall

ENERGY SAVING FEATURES

POLYURETHANE INSULATION

SECURITY AND LONG PRODUCT LIFE FEATURES

RELIABLE ANTICORROSION PROTECTION due to **CRYSTALTECH** enamel coating of the water tank

LONGER LIFE of the water tank ensured by a magnesium anode

PRESSURE RELIEF VALVE to prevent excess pressure build-up

HYGIENIC CERTIFICATE

ANTI-FREEZE protection

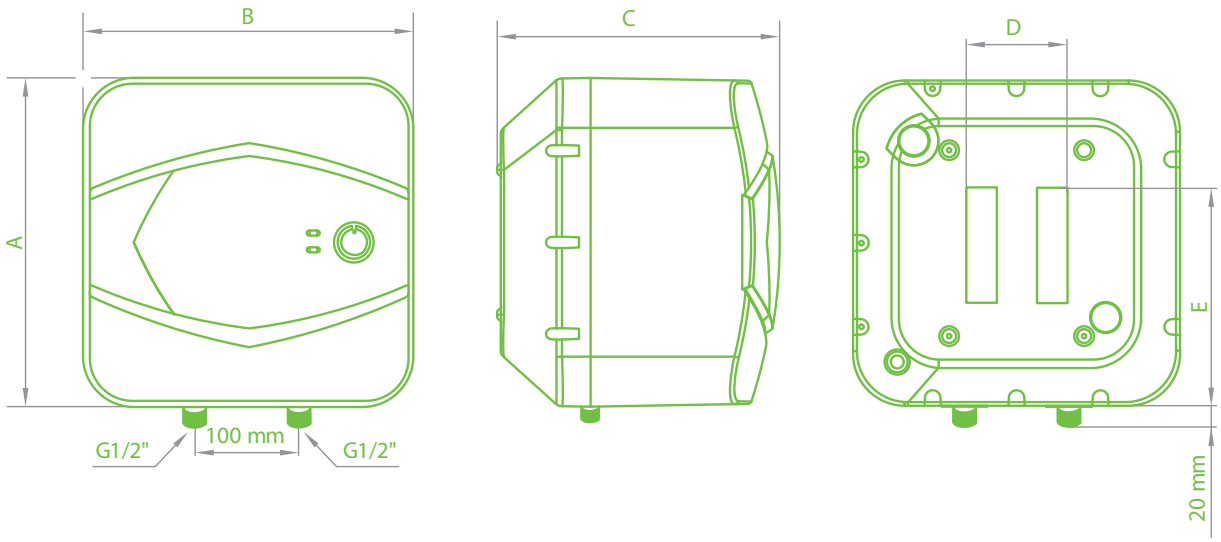

MODEL		COMPACT 7 U
CODE		GCU 0715 G01 RC
Real Volume	L	6.5
Rated power	W	1500
Heating time –Δ t 45 K (15 - 60° C)		0 h 14 min
Annual consumption of electricity AEC	kWh	525
Energy class		A
Load profile		XXS
*T out of box	°C	65
**V 40	L	11
***T max	°C	65
****Max 40	L	11
PRODUCT DIMENSIONS		
height (A)	mm	315
width (B)	mm	315
depth (C)	mm	278
D	mm	97
E	mm	211

*T out of box – the optimal working temperature for the specific electric water heater model, set by the producer
**V 40 – the quantity of hot water, which the electric water heater can produce, while working at T out of box
***T max – the maximal working temperature of the electric water heater
****Max 40 – the maximal quantity of hot water, which the electric water heater can produce, while working at maximum temperature

Compact 5

under sink installation

FLOOR STANDING



INNOVATIVE AND CONVENIENCE FEATURES

SAVES SPACE due to compact size

EASY INSTALLATION only through 2 flexible connectors

USE IT ONLY WHEN NECESSARY, because it does not need to be attached to the wall

ENERGY SAVING FEATURES

POLYURETHANE INSULATION

SECURITY AND LONG PRODUCT LIFE FEATURES

RELIABLE ANTICORROSION PROTECTION due to **CRYSTALTECH** enamel coating of the water tank

LONGER LIFE of the water tank ensured by a magnesium anode

PRESSURE RELIEF VALVE to prevent excess pressure build-up

HYGIENIC CERTIFICATE

ANTI-FREEZE protection

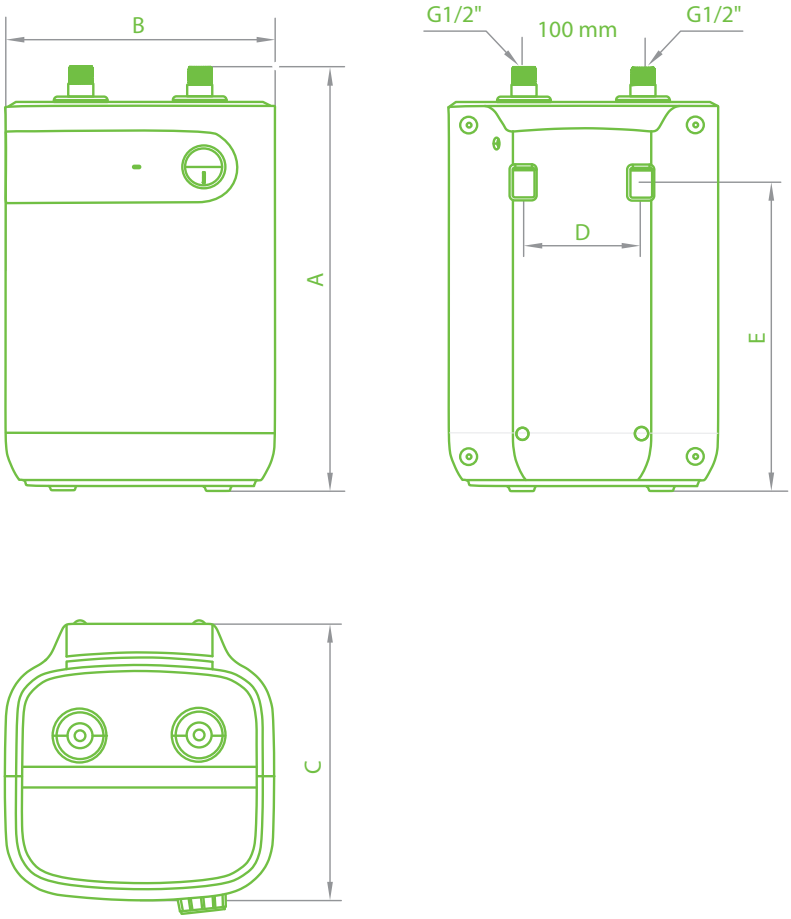

MODEL		COMPACT 5
CODE		GCU 0515 M02 RC
Real Volume	L	5
Rated power	W	1500
Heating time –Δ t 45 K (15 - 60° C)		0 h 10 min
Annual consumption of electricity AEC	kWh	2755
Energy class		B
Load profile		XXS
*T out of box	°C	65
**V 40	L	8
***T max	°C	65
****Max 40	L	8
PRODUCT DIMENSIONS		
height (A)	mm	328
width (B)	mm	234
depth (C)	mm	227
D	mm	98
E	mm	260

*T out of box – the optimal working temperature for the specific electric water heater model, set by the producer
**V 40 – the quantity of hot water, which the electric water heater can produce, while working at T out of box
***T max – the maximal working temperature of the electric water heater
****Max 40 – the maximal quantity of hot water, which the electric water heater can produce, while working at maximum temperature



TESY



INSTANTANEOUS
WATER HEATERS


TESY



Instantaneous

THE HOT WATER NEVER RUNS OUT

- INSTALINE KITCHEN
- INSTALINE BATH
- INSTALINE MULTI

TESY
It's impressive



Instantaneous water heater with a metal faucet



Instantaneous water heater with a ceramic faucet

Innovative and convenience features	Instant water heating	✓	✓
	Space saving	✓	✓
	Easy installation	✓	✓
	Suitable for Kitchen	✓	✓
	Suitable for Bathroom		
	360-degree Installation options		
Energy-saving features	The highest energy class A	✓	✓
Security and long-life features	Overheating protection	✓	✓





		Instantaneous water heater with a shower head	Universal instantaneous water heater
Innovative and convenience features	Instant water heating	✓	✓
	Space saving	✓	✓
	Easy installation	✓	✓
	Suitable for Kitchen		✓
	Suitable for Bathroom	✓	✓
	360-degree Installation options		✓
Energy-saving features	The highest energy class A	✓	✓
Security and long-life features	Overheating protection	✓	✓

InstaLine Kitchen

Instantaneous water heater with a metal faucet

CLASS A, HOT WATER ON DEMAND



INNOVATIVE AND CONVENIENCE FEATURES

INSTANT ACTION - get your hot water just when you need it

SAVES SPACE due to tiny size

QUICK AND EASY INSTALLATION - directly on the cold water inlet

The set includes a cold and hot water faucet, a cord with a plug, and all the necessary fitting accessories for installing the water heater.

ENERGY SAVING FEATURES

Delivering the highest **ENERGY CLASS A**

It doesn't use energy to store hot water, only to heat it

SECURITY AND LONG PRODUCT LIFE FEATURES

SAFE AND RELIABLE, equipped with overheating protection

In instantaneous water heaters, the outgoing water temperature of the appliance is directly dependent on the usage flow rate and the incoming water temperature. This can sometimes result in uncomfortable water temperatures, especially during the winter.

If the household's hot water needs are greater than the capacity of the model, it will not be able to deliver water at high enough temperatures to fully meet your needs.

*Please consult a qualified electrician for more specific information on the compliance of the selected water heater model with your power grid.

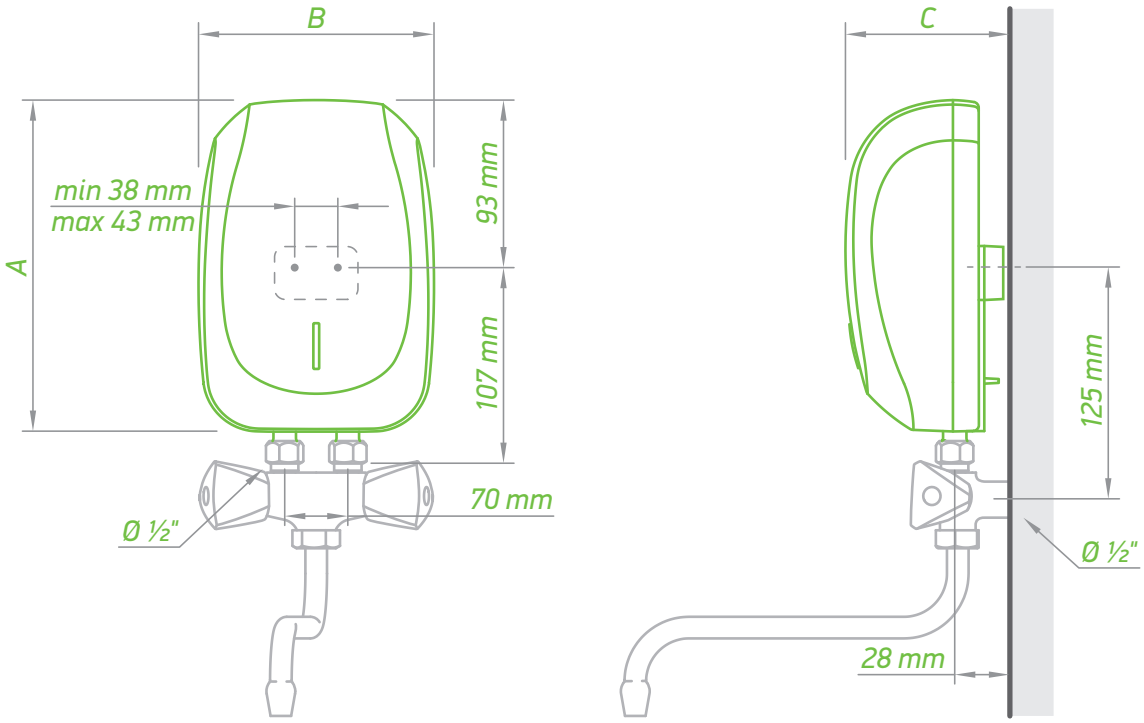

We recommend that you choose a model based on your needs; for reference, you can use the data attached below:

Temperature difference between water input and output	Usage flow rate	
ΔT, K	3.5 kW	5.0 kW
20	2.5 l/min	3.5 l/min
25	-	2.9 l/min

MODEL		INSTALINE KITCHEN 3.5	INSTALINE KITCHEN 5
CODE		IWH 35 X02 KI	IWH 50 X02 KI
Rated power	W	3500	5000
Installation		above the sink	above the sink
Energy class		A	A
PRODUCT DIMENSIONS			
height (A)	mm	200	200
width (B)	mm	130	130
depth (C)	mm	76	76

TESY
It's impressive

InstaLine Kitchen

Instantaneous water heater with a ceramic faucet

QUICK AND EASY INSTALLATION



INNOVATIVE AND CONVENIENCE FEATURES

INSTANT ACTION - get your hot water just when you need it

SAVES SPACE due to tiny size

QUICK AND EASY INSTALLATION - directly on the cold water inlet

ENERGY SAVING FEATURES

Delivering the highest **ENERGY CLASS A**

It doesn't use energy to store hot water, only to heat it

SECURITY AND LONG PRODUCT LIFE FEATURES

SAFE AND RELIABLE, equipped with overheating protection

ESPECIALLY RESISTANT TO WEAR AND TEAR, as it has a ceramic dispenser built into the body of the mixer faucet with extremely durable ceramic discs

In instantaneous water heaters, the outgoing water temperature of the appliance is directly dependent on the usage flow rate and the incoming water temperature. This can sometimes result in uncomfortable water temperatures, especially during the winter.

If the household's hot water needs are greater than the capacity of the model, it will not be able to deliver water at high enough temperatures to fully meet your needs.

*Please consult a qualified electrician for more specific information on the compliance of the selected water heater model with your power grid.

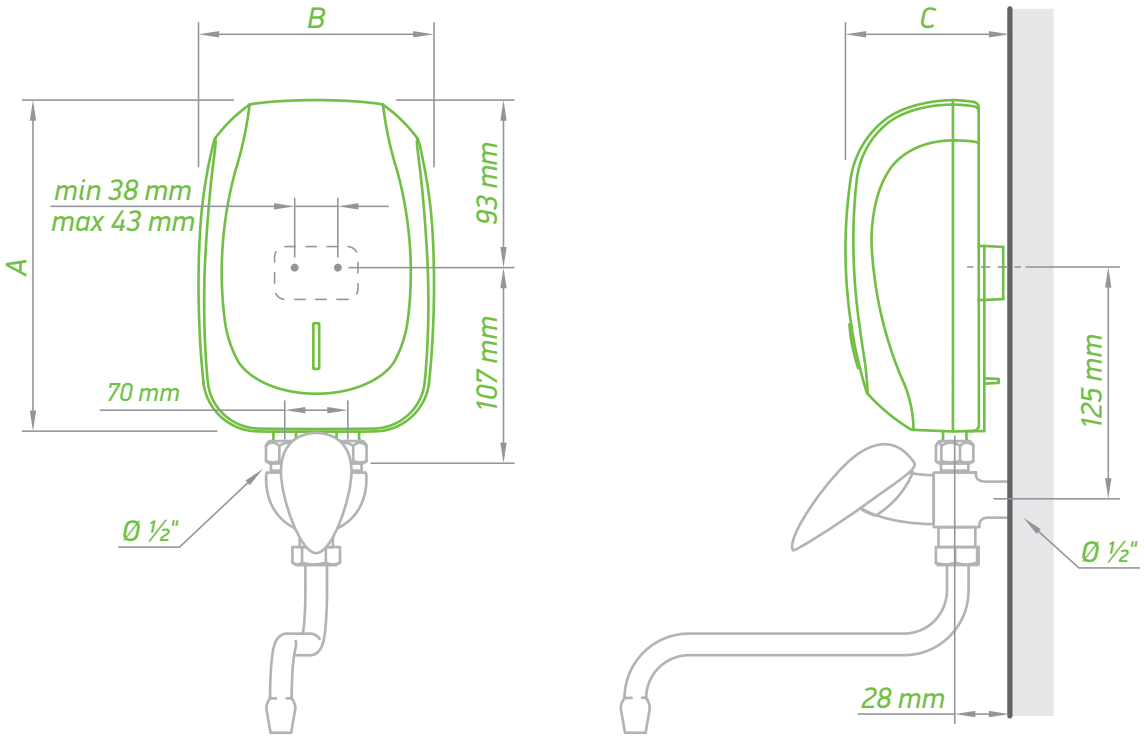

We recommend that you choose a model based on your needs; for reference, you can use the data attached below:

Temperature difference between water input and output	Usage flow rate	
ΔT, K	3.5 kW	5.0 kW
20	2.5 l/min	3.5 l/min
25	-	2.9 l/min

MODEL		INSTALINE KITCHEN 3.5	INSTALINE KITCHEN 5
CODE		IWH 35 X02 KIH	IWH 50 X02 KIH
Rated power	W	3500	5000
Installation		above the sink	above the sink
Energy class		A	A
PRODUCT DIMENSIONS			
height (A)	mm	200	200
width (B)	mm	130	130
depth (C)	mm	76	76

InstaLine Bath

Instantaneous water heater with a shower head

HIGH POWER /SUITABLE FOR THE BATHROOM/



INNOVATIVE AND CONVENIENCE FEATURES

INSTANT ACTION - get your hot water just when you need it

SAVES SPACE due to tiny size

The set includes a showerhead and all the necessary fitting accessories for installing the water heater.

ENERGY SAVING FEATURES

Delivering the highest **ENERGY CLASS A**

It doesn't use energy to store hot water, only to heat it

SECURITY AND LONG PRODUCT LIFE FEATURES

SAFE AND RELIABLE, equipped with overheating protection

In instantaneous water heaters, the outgoing water temperature of the appliance is directly dependent on the usage flow rate and the incoming water temperature. This can sometimes result in uncomfortable water temperatures, especially during the winter.

If the household's hot water needs are greater than the capacity of the model, it will not be able to deliver water at high enough temperatures to fully meet your needs.

*Please consult a qualified electrician for more specific information on the compliance of the selected water heater model with your power grid.

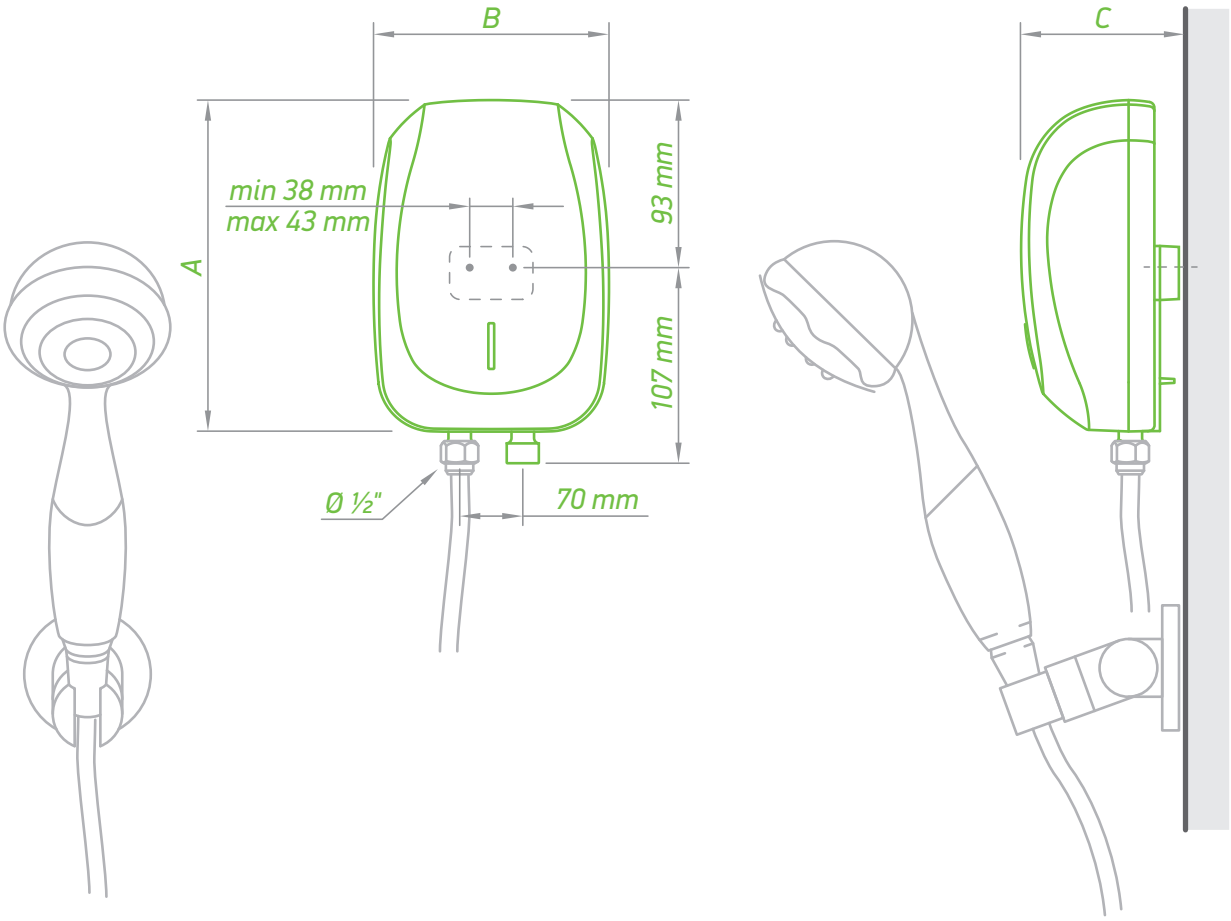

We recommend that you choose a model based on your needs; for reference, you can use the data attached below:

Temperature difference between water input and output	Usage flow rate
ΔT, K	7.0 kW
20	5.0 l/min
25	4.0 l/min

MODEL		INSTALINE BATH 5	INSTALINE BATH 7
CODE		IWH 50 X02 BAH	IWH 70 X02 BA H
Rated power	W	5000	7000
Installation		bathroom	bathroom
Energy class		A	A
PRODUCT DIMENSIONS			
height (A)	mm	200	200
width (B)	mm	130	130
depth (C)	mm	76	76

TESY
It's impressive

InstaLine Multi

Universal instantaneous water heater

VERSATILE, HIGH POWER

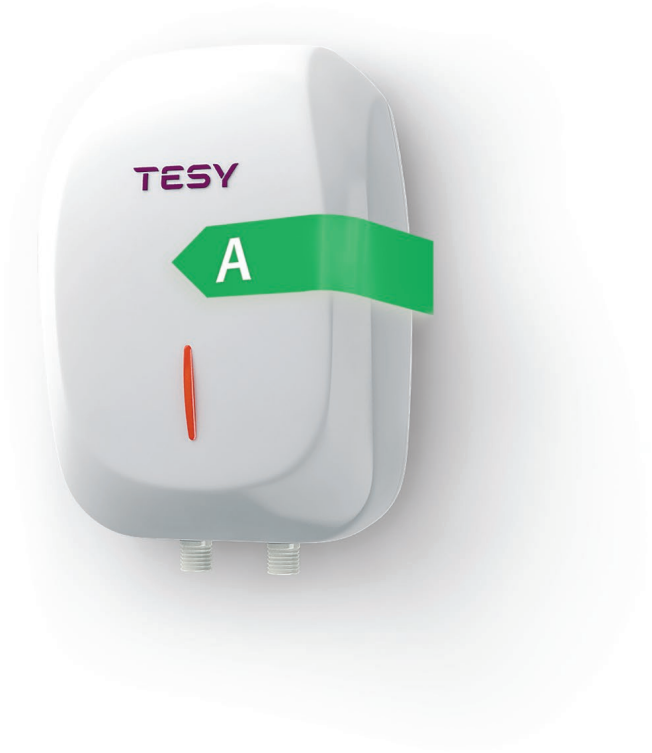

INNOVATIVE AND CONVENIENCE FEATURES

INSTANT ACTION - get your hot water just when you need it

SAVES SPACE due to tiny size

360-DEGREE INSTALLATION OPTIONS, under or over the sink, in any position

MULTIPLE POINTS OF USE

The set includes all the necessary fitting accessories for installing the water heater.

ENERGY SAVING FEATURES

Delivering the highest **ENERGY CLASS A**

It doesn't use energy to store hot water, only to heat it

SECURITY AND LONG PRODUCT LIFE FEATURES

SAFE AND RELIABLE, equipped with overheating protection

In instantaneous water heaters, the outgoing water temperature of the appliance is directly dependent on the usage flow rate and the incoming water temperature. This can sometimes result in uncomfortable water temperatures, especially during the winter.

If the household's hot water needs are greater than the capacity of the model, it will not be able to deliver water at high enough temperatures to fully meet your needs.

*Please consult a qualified electrician for more specific information on the compliance of the selected water heater model with your power grid.

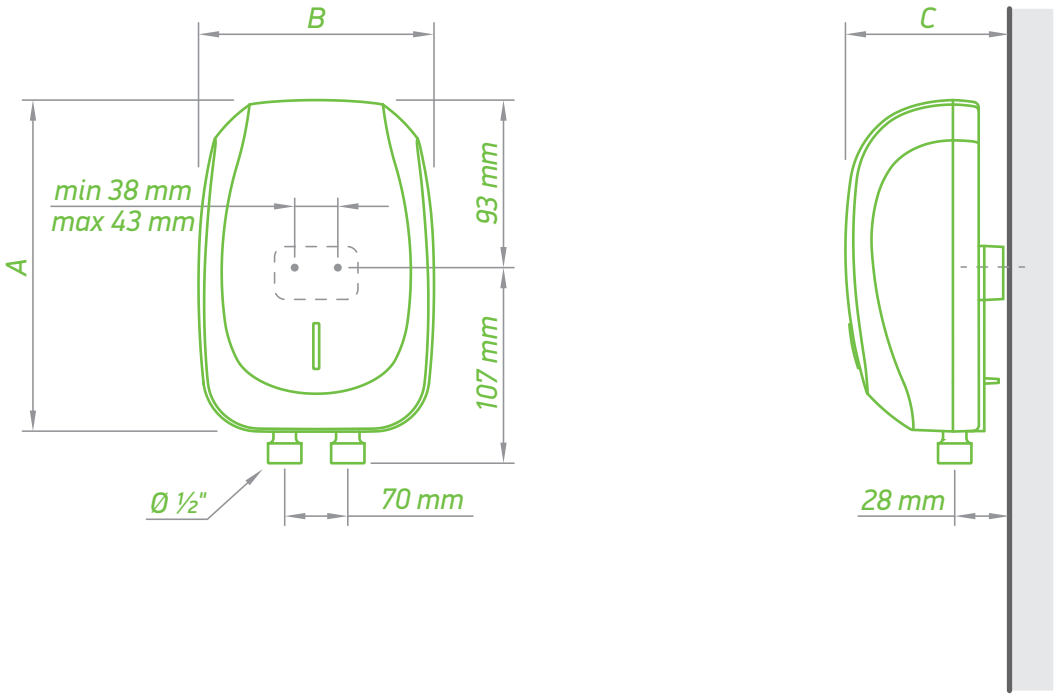

We recommend that you choose a model based on your needs; for reference, you can use the data attached below:

Temperature difference between water input and output	Usage flow rate
ΔT, K	8.0 kW
20	5.5 l/min
25	4.6 l/min

MODEL		INSTALINE MULTI 8	INSTALINE MULTI 8
CODE		IWH 80 X02 IL	IWH 80 X02 IL
Rated power	W	5000	8000
Installation		universal	universal
Energy class		A	A
PRODUCT DIMENSIONS			
height (A)	mm	200	200
width (B)	mm	130	130
depth (C)	mm	76	76

Notes

Tesy Ltd.
Sofia Park, Building 16 V, 2nd Floor
1766 Sofia, Bulgaria

www.tesy.com

This catalogue is a marketing material and it is not an offer.
For specific models, please contact your dealer.

Copyright © All Rights Reserved, v. 1 2023 – TESY Ltd.